BIODOM

PELLET BOILER

BIODOM 21

DF 25

Instructions for use, maintenance and installation



January 2020

We thank you for your purchase of Biodom boiler. We ask to thoroughly read instructions for use before installing and using your pellet boiler Biodom. Heating appliances (in the following: "pellet boiler" or "boiler") of company Biodom 27 d.o.o. (in the following: Biodom) are manufactured and tested in accordance with safety requirements of European Directives in force.
These instructions are intended for end users, installers and authorized maintenance personnel for Biodom pellet boilers. If you have any doubts regarding the instructions for use or require any clarification, please contact the manufacturer or authorized person of company Biodom Europe SRL directly.
Printing, translation or reproduction, even in part, of the instructions of use is possible only upon approval by company Biodom Europe SRL

You have purchased a Biodom boiler, which is used for central heating of surfaces from 60 m^2 to 300 m^2. The fuel for the boiler is wood pellets. The boiler operates automatically by dosing pellets with a dosing screw from pellet container, which is a component part of device and is installed above the boiler part of the device. The container is filled with pellets from above, through the provided cover. Ensure that the incineration device is correctly dimensioned according to heating system and thermal requirements of the building. Connection and start-up of the machine must be done by an authorized person.

Flame, produced with correct burning of wood biomass inside the boiler, emits the same amount of carbon dioxide (CO_2) as with normal decomposition of wood.
The amount of CO_2 produced by the combustion or decomposition of wood corresponds to the amount of CO_2 that a tree obtains from the environment and then transforms to oxygen and carbon. The use of non-renewable fossil fuels (coal, fuel oil, gas), as opposed to what happens with wood, releases into the air enormous amount of CO_2 accumulated over millions of years, which increases the greenhouse effect. The principle of clean combustion fully meets all environmental require-ments, and Biodom has based its entire development on this basis.

INDEX

1. WARNINGS 5

2. TECHNICAL CHARACTERISTICS 8

3. DIMENSIONS OF BOILER BIODOM 21 9

4. PURPOSE OF INSTRUCTIONS FOR USE 10

4.1. UPDATES 10

5. RESPONSIBILITY OF MANUFACTURER 10

5.1. BASIC PREVENTIVELY REQUIRED STANDARDS 10

5.2. TRANSPORTATION AND HANDLING OF PELLET BOILER 11

5.3. RESPONSIBILITY OF INSTALLER 11

6. INSTALLATION 12

6.1. PLACEMENT 12

6.2. EXTRACTION OF SMOKE GASES 15

6.3. INSULATION AND DIAMETER OF HOLES IN THE ROOF 17

6.4. INLET AIR 17

6.5. ELECTRICAL CONNECTION 18

7. BOILER COMMISSIONING 20

8. SAFETY WARNINGS 20

8.1. SAFETY WARNINGS FOR MAINTENANCE STAFF 20

8.2. SAFETY WARNINGS FOR USER 21

9. INSTRUCTIONS FOR SAFE IGNITION AND CLEANING OF BOILER 22

9.1. REGULAR MAINTENANCE AND CLEANING OF BOILER 22

9.2. CONTROL AND PARTS REQUIRING MAINTENANCE 24

9.3. ADDITIONAL MAINTENANCE 24

10. IMPORTANT SAFETY INFORMATION 25

11. PELLET QUALITY IS VERY IMPORTANT 26

11.1. STORING PELLETS 27

12. DESCRIPTION AND OPERATION OF CONTROL DEVICE 28

12.1. BOILER DURING OPERATION 31

12.2. BOILER SHUTDOWN 31

12.3. BOILER ACTIVATION 31

12.4. TIME PROGRAMME SETTING 32

13. INDICATIONS AND MESSAGES ON DISPLAY 35

14. MENU 37

15. ALARM STATUSES 39

16. INFORMATION REGARDING DESTRUCTION AND DISPOSAL OF BOILER 46

17. INSTRUCTIONS FOR INSTALLERS 47

18. BOILER CONNECTION INSTRUCTIONS 48

18.1. SCHEME OF ELECTRONIC CONTROL PANEL OF THE BOILER 51

18.2. SCHEME NR.1: HEATING ONLY 52

18.3. SCHEME NR.2: HEATING HOUSEHOLD HOT WATER 54

18.4. SCHEME NR.3: HEATING WITH MULTIPLE SYSTEMS 56

19. INSTRUCTIONS FOR FIRST START-UP 59

20. WARRANTY CONDITIONS 62

21. SCHEME OF COMPONENTS 64

1. WARNINGS



ATTENTION

DISCARD ALL PACKAGING OUT OF REACH OF CHILDREN. DANGER OF SUFFOCATION WITH BAG, FOIL, POLYSTYRENE ETC.



ATTENTION

Smoke gas discharge MUST NOT BE CONNECTED TO:

- **Flue pipe, used by other combustion devices (boilers, stoves, fireplaces etc.);**
  Air extraction systems (hoods, air extraction fans etc.).



ATTENTION

Installation of draught closing valves is prohibited!

Flue connection Ø 80 mm from pellet boiler to flue pipe should be:

- **no more than 10 m long (in case of longer connection, dimension of connection pipe must increase to Ø 130 mm);**
- **each 90° joint requires a 1 m shorter flue connection;**
- **each joint must be fitted with doors for cleaning;**
  connections between pipes must be sealed



ATTENTION

If there is too much resistance in extraction system (many joints, improper end fitting, bottlenecks etc.), extraction of smoke gases is not provided for. Therefore, connection pipes and joints must be increased to a greater dimension – Ø 130 mm. If the flue does not ensure appropriate extraction of smoke gases, it can also come do improper operation and, consequently, to alarm from boiler BIODOM. It is advisable that the flue is inspected by an expert before installing boiler BIODOM.



ATTENTION

Never turn off the boiler by pulling the electrical cable from the socket, while fire is still burning in the boiler. This could damage the boiler and seriously jeopardize its functioning.



ATTENTION

Extraction of smoke gases must be earthed in accordance with regulations in force. (Earthing connection is required by law). Earthing must be independent of combustion unit.



ATTENTION

When the boiler installation is finished, it is mandatory to perform measurements of smoke gases discharge.



ATTENTION

The pellet boiler operates by creating negative pressure in the combustion chamber. Therefore, ensure that the extraction of smoke gases is thermally sealed.

Upon first start-up (minimum operation of boiler – 1 hour), paint evaporates fumes, which have unpleasant odour. Therefore, ventilate the room afterwards.



ATTENTION

DURING PELLET BOILER OPERATION, CHILDREN ARE PROHIBITED TO COME NEAR OR PLAY WITH IT!



ATTENTION

Be careful that the sealant rope under the edge of combustion chamber is not damaged. If the sealant rope is damaged, contact an authorized service centre.



ATTENTION

Ensure that the pellet boiler and ashes in it are cool before cleaning.



ATTENTION

In the event of fire in the flue pipe, all persons and animals must leave the area, then immediately disconnect power supply from the main switch or socket (if it is possible without risk) and call the fire department.



ATTENTION

Do not use fine cut wood to ensure operation and safety of the boiler.



ATTENTION

Do not use the pellet boiler as an incinerator.



ATTENTION

Persons with back injuries and pregnant women should avoid lifting pellet bags.



ATTENTION

The manufacture shall in no way be held liable for damages arising from the use of poor quality pellets, as well as for poor functioning of the boiler due to poor quality of used pellets.



ATTENTION

Pellets should be in accordance with DIN 51731, DIN plus, Ö-Norm M-7135 or other comparable European standards.



ATTENTION

PELLETS SHOULD NOT BE STORED NEAR THE PELLET BOILER. Keep them at least 50 cm away.

---

2. TECHNICAL CHARACTERISTICS

	Minimal	Nominal
Thermal power	**5,82 kW**	**19,67 kW**
Efficiency	**92,36 %**	**91,49 %**
Pellet consumption per hour	**1,39 kg/h**	**5,14 kg/h**
Burning time with 1 filling of container (approx.)	**90 h**	**24,3 h**
Temperature of smoke gases	**68 °C**	**130 °C**
Mass flow of smoke gases	**5,56 g/s**	**11,9 g/s**
Fuel	**Pellets C1**	
boiler class according to EN 303-5:2012	**5**	
Flue connection	**Ø80 mm**	
Water volume in boiler	**61 l**	
Boiler water temperature	**65 °C – 80 °C**	
Highest boiler water temperature	**90 °C**	
Minimum return water temperature	**50 °C**	
Maximum permitted work pressure	**2,5 bar**	
Boiler resistance ΔT = 20 °C	**38 mbar**	
Firebox volume	**60,44 l**	
Weight	**230 kg**	
Pellet container	**~ 130 kg**	
Flue draught	**10 Pa (± 10) Pa**	
Voltage	**220 V**	
Current at maximum electrical consumption during boiler operation	**1,80 A**	
Frequency	**50 Hz**	
Maximum consumption of power during boiler operation	**39 W**	
Minimum consumption of power during boiler operation	**21,1 W**	
Maximum consumption of power during boiler ignition	**278 W**	

Stand consumption	**2,2 W**
Safety level	**IP20**
Boiler operates with two fans	
Boiler operates only in manner of negative pressure combustion	
Boiler operates without condensation conditions	
Noise	**does not exceed 70 dB**
CO emissions at 13% O2	**32** mg/m_n3
OGC emissions at 13% O2	**<4,4** mg/m_n3
Ash at 13% O2	**0,02** mg/m_n3

Report number 2003833/C-517

3. DIMENSIONS OF BOILER BIODOM 21

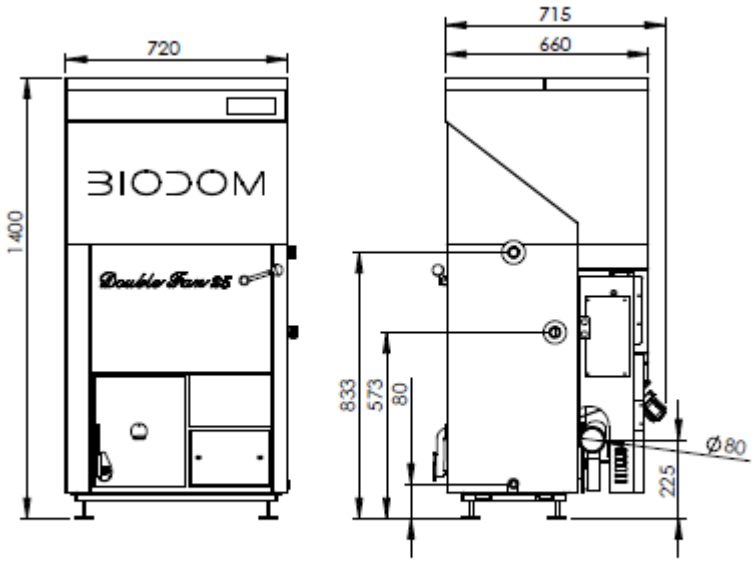

BD 21 DF 25

4. PURPOSE OF INSTRUCTIONS FOR USE

The purpose of instructions for use is that the user takes all necessary measures and prepares all required equipment to ensure safe and proper use of combustion device.

4.1. UPDATES

These instructions reflect the state of the product at the moment the boiler is produced.
Instructions are not applicable for products, which are already present on the market with corresponding technical documentation and cannot be considered as insufficient or inadequate after any modification, adaptation or application of new technologies on newer products.
The content of this booklet must be carefully read and heeded to. All of the information, contained in this booklet, is necessary for correct installation, use and maintenance of you boiler.
The instructions must be stored carefully and safely. Instructions for use, maintenance and installation are a component part of pellet boiler.
If the pellet boiler changes ownership to another person, this person must also receive these instructions for use, together with the boiler.
If the instructions get lost, request for a new copy of instructions from the manufacturer, authorized reseller or repairman.

5. RESPONSIBILITY OF MANUFACTURER

In providing these instructions, Biodom 27 d.o.o. rejects any civil or penal liability, direct or indirect, due to:

- accidents caused by non-compliance with standards and specifications from these instructions;
- accidents caused by prohibited or incorrect use by the user;
- accidents caused by modifications and repairs not authorized by manufacturer Biodom 27 d.o.o.;
- poor maintenance;
- unforeseeable events;
- accidents caused by use of non-original or improper spare parts.

The installer is fully responsible for installation.

5.1. BASIC PREVENTIVELY REQUIRED STANDARDS

Product Biodom 21 is manufactured in accordance with the following standards:

DIRECTIVE EC ON MACHINERY (2006/42/EC);
DIRECTIVE EC ON LOW-VOLTAGE EQUIPMENT (2014/35/ES);
DIRECTIVE EC ON ELECTROMAGNETIC COMPATIBILITY (2014/30/ES);
DIRECTIVE EC ON BOILERS FOR HEATING ON SOLID FUELS UP TO NOMINAL POWER kW; EN 303-5

Harmonized standards:

- SIST EN ISO 12100-1: 2004 and A1: 2010;
- SIST EN ISO 12100-2: 2004 and A1: 2010;
- SIST EN 303-5: 2012;
- 61000-6-3: 2007;
- 61000-6-2: 2005;
- 61000-3-3: A1 2002;
- 61000-3-3: A2 2006;
- EN 60204-1: 2006 and A1:2009.

5.2. TRANSPORTATION AND HANDLING OF PELLET BOILER

When moving the boiler, pay attention to your safety.
Before transport and handling of the boiler, which must be performed in complete safety, make sure that the lifting capacity of transport equipment suffices. Avoid sudden and/or abrupt movement of boiler.



ATTENTION

DISCARD ALL PACKAGING OUT OF REACH OF CHILDREN. DANGER OF SUFFOCATION WITH BAG, FOIL, POLYSTYRENE ETC.

5.3. RESPONSIBILITY OF INSTALLER

It is the responsibility of the installer to check adequacy of installation and pipeline, ensure air intake for combustion, ensures regulated distances and all other solutions, required for installation of the pellet boiler.
It is the responsibility of the installer to ensure compliance with local legislation in force in the place of pellet boiler installation.
Use of the pellet boiler must conform with instructions, provided in Instructions for use, maintenance and installation, and all safety standards, specified by local legislation in the place of pellet boiler installation.
Standard UNI 10683 defines duties of installer. The installer must check:

- type of device to be installed;
- adequacy of space for installation of unit, reflected by minimum required size of the space, in which the pellet boiler will be installed;
- instructions of the manufacturer about heating device, regarding requirements of smoke gases outlet;
- flue pipe internal diameter, the material it is made of, is it straight or even and that there are no obstructions;
- height and, if required, vertical extension of flue pipe;
- existence and suitability of flue pipe cover resistance;
- possibility of outside air intake;
- possibility of simultaneous use of generator for connection with other equipment.

If the results of all above provided checks are positive, installation may proceed. Carefully heed to instructions provided by the manufacturer, as well as safety and fire prevention standards in force.
After the first start-up of the boiler, perform a minimum 30-minute test of operation to check all required demands.
When the installation is complete, the installer must provide the customer with the following:

- instructions for use, maintenance and installation from the manufacturer (if not included in the unit);
- required documentation in accordance with standards in force;
- perform training of customer for operation and regular maintenance and cleaning of the device.

6. INSTALLATION

Responsibility for installation work in the space is entirely upon the customer.
Before proceeding with installation, the installer must comply with all required legal safety standards, especially:

- Check that norms regarding pellet boiler installation meet local, national and European norms
- Heed to requirements set forth in this document
- Check that pipes and air intake are compliant with the type of installation
- Do not make temporary electrical connections by using unsuitable cables
- Check earthing of electrical system
- Always use individual safety equipment and all legally required protection
- Always allow sufficient space for maintenance work
- Acquire consent of chimney sweep for connection of boiler to flue
- Perform measurement of smoke gases outlet after finished installation.

6.1. PLACEMENT

It is advisable to remove pellet boiler packaging only when it is in the place of installation.

If the adjacent walls and/or flooring are made of material that is not heat resistant, suitable protection must be provided using insulating, non-combustible material.

For protection of flooring, made of flammable material, we advise installing a metal plate with thickness 3 to 4 mm under the boiler, which protrudes at least 30 cm out from the front of the pellet boiler.

Pellet boiler must be installed in accordance with drawing that defines distances from walls (***figure 1***).

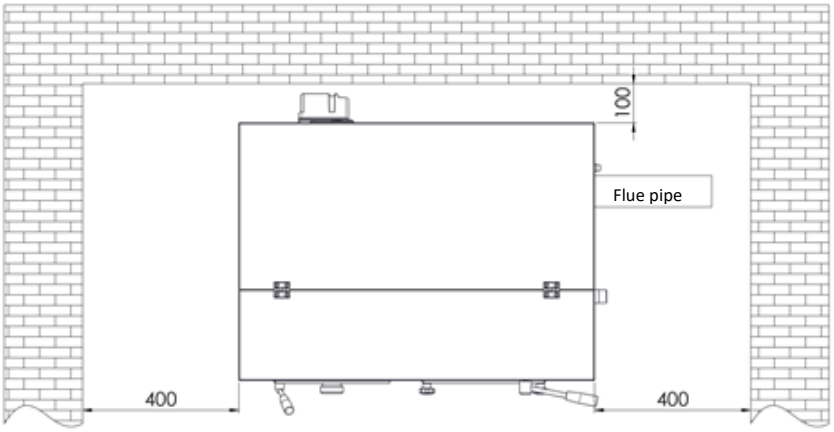

EXAMPLE 1

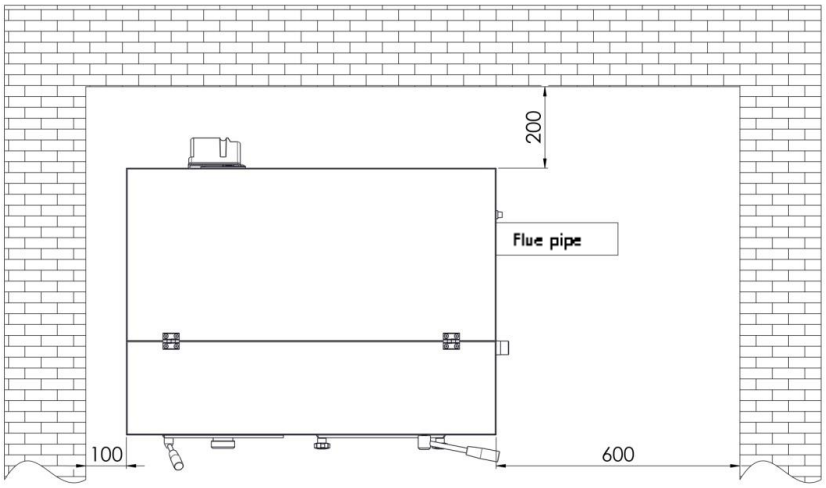

EXAMPLE 2

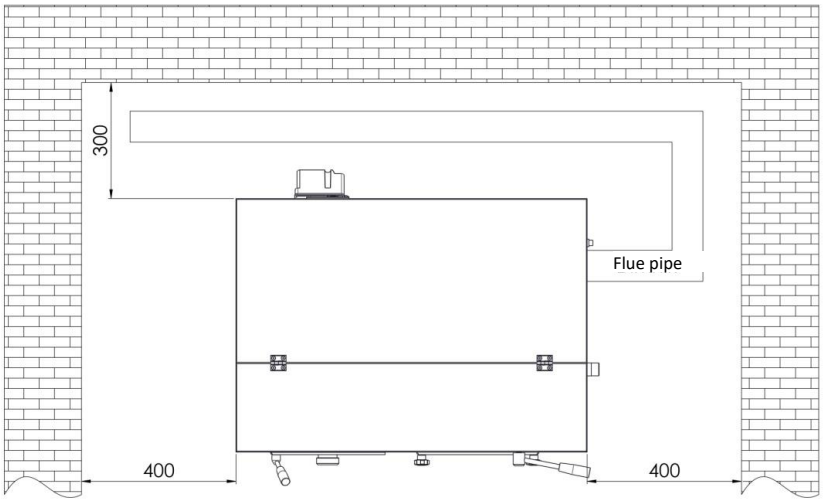

EXAMPLE 3

Figure 1: Minimum distance of boiler from boiler room walls

If the pellet boiler is installed in a boiler room, where there are other devices, which drain air (other boiler, various suction fans etc.), make sure that the volume of air intake is sufficient for safe operation of combustion device.

If the smoke duct passes through a ceiling, it must be properly insulated using diaphragm of non-combustible insulation material.

When the pellet boiler is placed, it must be levelled with support feet (horizontal positioning).



ATTENTION

Smoke gas discharge MUST NOT BE CONNECTED TO:

- **Flue pipe, used by other combustion devices (boilers, stoves, fireplaces etc.);**
- **Air extraction systems (hoods, air extraction fans etc.).**



ATTENTION

Installation of draught closing valves is prohibited!

Flue connection Ø 80 mm from pellet boiler to flue pipe should be:

- **no more than 10 m long (in case of longer connection, dimension of connection pipe must increase to Ø 130 mm);**
- **each 90° joint requires a 1 m shorter flue connection;**
- **each joint must be fitted with doors for cleaning;**
- **connections between pipes must be sealed.**



ATTENTION

If there is too much resistance in extraction system (many joints, improper end fitting, bottlenecks etc.), extraction of smoke gases is not provided for. Therefore, connection pipes and joints must be increased to a greater dimension – Ø 130 mm. If the flue does not ensure appropriate extraction of smoke gases, it can also come do improper operation and, consequently, to alarm from boiler Biodom 21. It is advisable that the flue is inspected by an expert before installing boiler Biodom 21.

Smoke gases extraction system from pellet boiler functions on the basis of negative pressure in the boiler and barely perceivable pressure in flue connection pipe Ø 80 mm. It is very important that the smoke gases extraction is sealed.

Layout and structure of the space, where the flue is installed, needs to be analyzed. If it passes through walls and/or roof, it must be properly installed in accordance with fire prevention safety standards.

Ensure that there is enough air for proper combustion in the space, where the pellet boiler is installed. If boiler Biodom 21 lacks oxygen/air, the boiler displays an alarm. External supply or intake of external air requires a pipe with a diameter of at least 110 mm with maximum length of 10 m. Each 90° joint requires a deduction of 1 m in line length. If the air supply is longer, diameter of air intake pipe must be increased.

In case of a grid on the facade, draught opening must be 100 cm² or larger.

The device operates at 220 V – 50 Hz. Make sure that the electrical cables are not laid under the boiler, that they are far away from hot surfaces and that they do not touch sharp parts, which could

damage them. If the pellet boiler is under electrical overload, life expectancy of electrical component greatly reduces.

ATTENTION

Never turn off the boiler by pulling the electrical cable from the socket, while fire is still burning in the boiler. This could damage the boiler and seriously jeopardize its functioning.

6.2. EXTRACTION OF SMOKE GASES

Extraction of smoke gases must be in accordance with regulations in force. Pipes for smoke gases must not be connected to other discharge pipes of any other combustion device (***figure 2***). It is prohibited to set up extraction of smoke gases into closed and/or semi-closed spaces, e.g. garage, narrow passages or hallways, underpasses or any other similar spaces. If the flue connection is not suitable, it must be implemented in accordance with previously provided requirements (point 3.1).

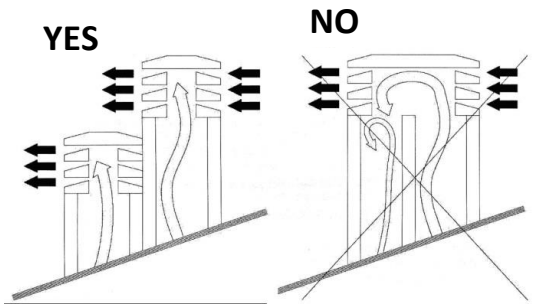

Figure 2

ATTENTION

Extraction of smoke gases must be earthed in accordance with regulations in force. (Earthing connection is required by law).
Earthing must be independent of combustion unit.

Regarding dimensions and material, from which it is made, the flue pipe must conform to standards UNI 9615-9731, UNI 10683 - EN1856-1.
Flue pipes in poor condition and/or made of unsuitable materials (asbestos, zinced sheet metal etc., with rough or porous surfaces) are prohibited by law and compromise proper boiler operation.

Smoke can be extracted through a traditional flue pipe (see figure below) provided that the following rules are met:

- Check condition of flue pipe maintenance. For proper maintenance and/or restoration contact chimney sweep service.

- Extraction of smoke gases can be connected directly to flue pipe only if it has a maximum dimension of 20 x 20 cm or diameter of 20 cm and is fitted with inspection hole.
- If the flue pipe is of greater dimensions, a stainless pipe (with required diameter) with proper insulation must be installed into it.
- Make sure that the connection with the flue pipe is properly sealed.
- Avoid contact with flammable material (such as wood ashes), and, in any case, insulate them with fire-resistant material.

When using connections between the pellet boiler and flue pipe, it is mandatory to use joints with cleaning doors (***figure 3***). Use of joints with cleaning doors enables regular cleaning without the need to disassemble pipes. Exhaust fumes in flue connection are under slight pressure. Therefore, it is compulsory to check that the cover for cleaning ash is completely hermetically closed and that it remains in this state after each cleaning. Ensure proper reassembly and check condition of the seal.



Figure 3: Cleaning unit

Connection between pipes must be always made with male fitting turned upwards (***figure 4***).

It is advisable to avoid using horizontal connections of pipes to flue. If this is not possible, the pipes must not be installed in a downwards angle, but at an upwards angle of at least 5° (***figure 5***). Horizontal installation of pipes must not exceed 2 m in length.
It is not advisable to connect the pipe from the pellet boiler directly to flue with horizontal pipe, longer than 1 m.

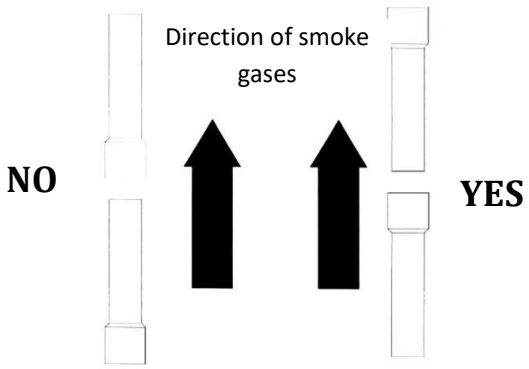

Figure 4

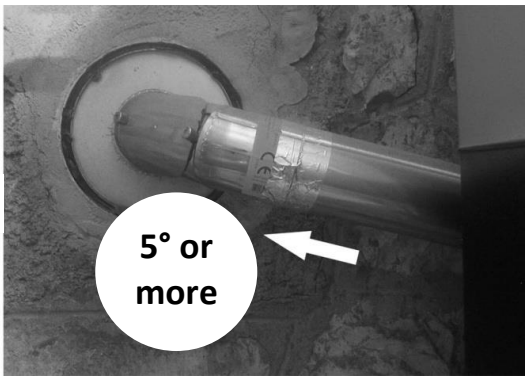

Figure 5

6.3. INSULATION AND DIAMETER OF HOLES IN THE ROOF

Once the position of boiler installation is determined, a hole for passage of smoke pipes must be made. This changes in regard to the type of installation, diameter of smoke pipes and type of wall or roof, through which it must be guided. Insulation must be of mineral origin (rock wool) with nominal density greater than 80 kg/m³.

Perfect draught depends mostly on flue pipe, which must be free of obstructions, such as bottlenecks and/or various joint connections. Joint must be at an angle of 30°, 45° and 90°. Joints at an angle of 90° must be made of three parts (***figure 6***).

In any case, it is mandatory to provide an initial vertical straight pipe of 1,5 metres in length (minimum) to ensure correct extraction of smoke gases.

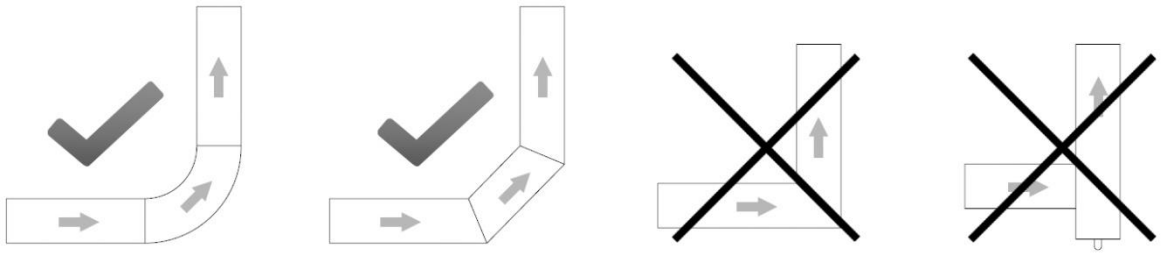

Figure 6

6.4. INLET AIR

Air from the environment, required for correct combustion, must be refreshed with new air, through opening in the wall, slot in boiler room doors or grid on the window. This will ensure proper combustion and proper boiler operation.

Opening for intake of fresh air must also be fitted with protective slot against rain, wind and insects.

Hole must be made on the external wall of the space, where the pellet boiler is installed.

Standard UNI 10683 prohibits intake of inlet air from storage of flammable materials or spaces with the risk of fire.

If there are other combustion devices in the room, a sufficient amount of air must be ensured, which is required for proper combustion of all combustion devices, and regard all technical properties of already installed ventilation systems in the boiler room.

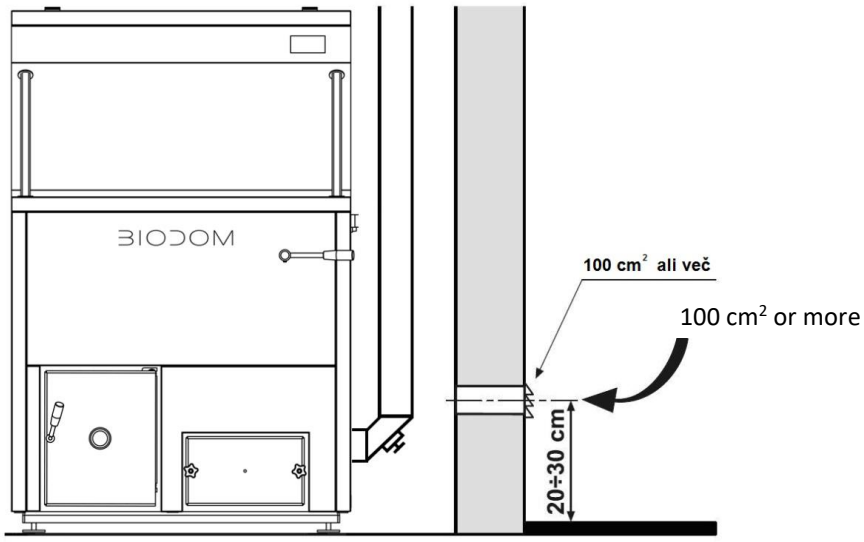

Figure 7

6.5. ELECTRICAL CONNECTION

Combustion device requires connection to electrical network. Our pellet boilers are fitted with power supply cable for medium temperatures. If the power supply cable is damaged and must be replaced, contact our service staff.
Before making electrical connections, make sure that:

- The characteristics of electrical wiring meet the data, given on the combustion device.
- **Extraction of smoke gases is earthed in accordance with regulations and local requirements in force. (Earthing is required by law).**
- **Power supply cable must never reach 80 °C above ambient temperature.** If you want to connect the boiler directly to electrical network, you must install a bipolar switch with minimum distance of 3 mm between contacts, suitable for required electrical voltage and in accordance with regulations in force. Bipolar switch must always be accessible, even after the boiler is installed.

Electrical connection
The pellet boiler must be connected to electrical network. Power supply cable is 3 m long, white and designated with "220 V". Other connection cable is intended for connection of pump, is black and designated with "Pump".

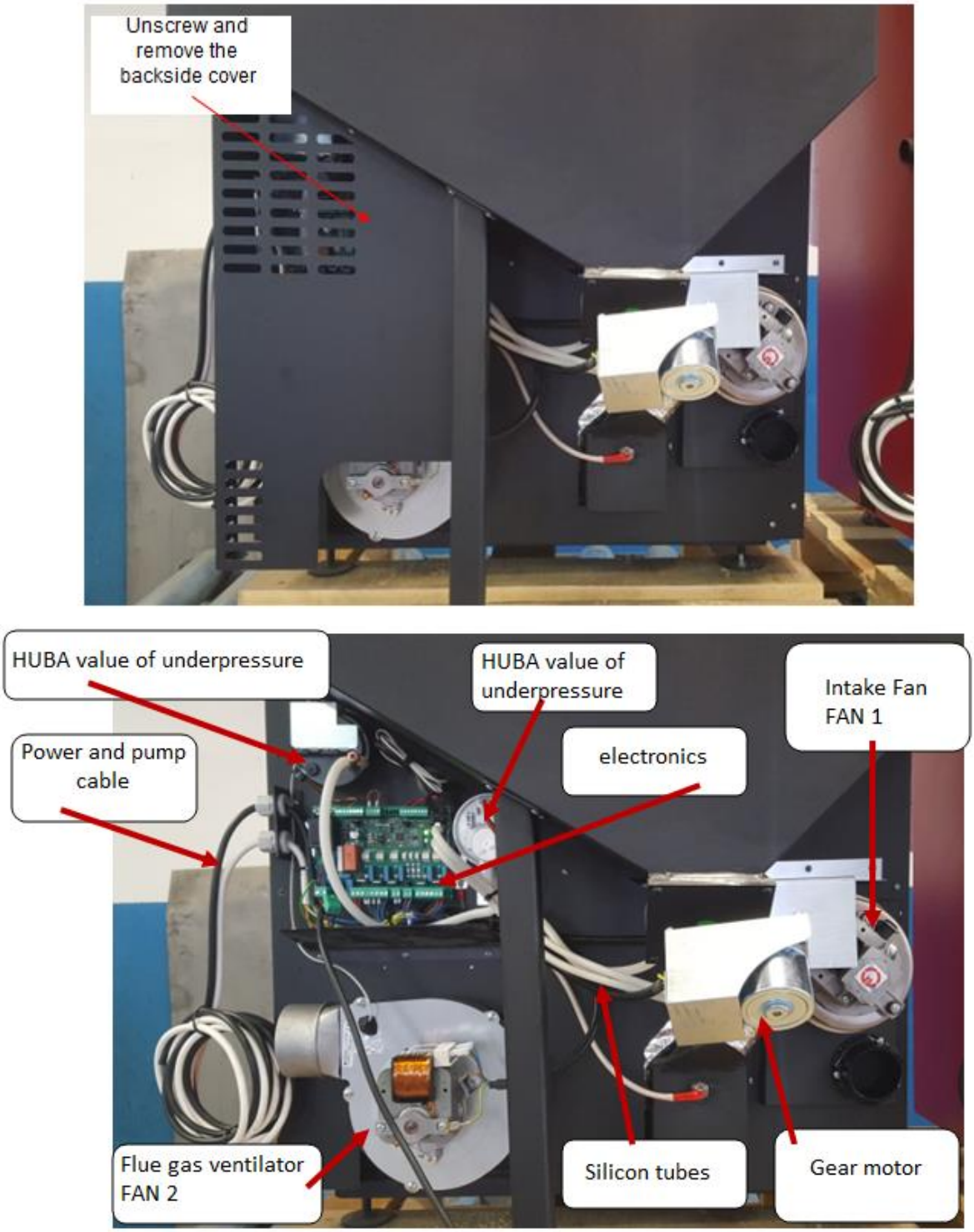

Figure 8

White – Boiler supply (220 V)
Black – Pump

If the power supply cable is damaged, it must be replaced. It can only be replaced by an authorized person.
Electrical connection must be easily accessible even after the pellet boiler is installed.



ATTENTION

When the boiler installation is finished, it is mandatory to perform measurements of smoke gases discharge.

7. BOILER COMMISSIONING

Boiler commissioning can be performed only by a manufacturer authorized technician, otherwise the warranty is void.

INSTRUCTIONS FOR SAFETY OF PERSONS, ANIMALS AND PERSONAL PROPERTY

We wish to inform the installer on some general guidelines, which must be complied with for correct installation of pellet boiler. These are required standards, but are not sufficient; for further and more detailed information it is necessary to read the rest of the Instructions for use, maintenance and installation

- Connect the pellet boiler to electrical network;
- Do not allow children or animals in the boiler area;
- Use only quality pellets and no other types of fuel;
- Inform all users on possible risks and hazards, and educate them on handling the pellet boiler;
- If the pellet boiler is placed on a wooden floor, it is advisable to protect the floor in accordance with regulations.



ATTENTION

The pellet boiler operates by creating negative pressure in the combustion chamber. Therefore, ensure that the extraction of smoke gases is thermally sealed.

Upon first start-up (minimum operation of boiler – 1 hour), paint evaporates fumes, which have unpleasant odour. Therefore, ventilate the room afterwards.

8. SAFETY WARNINGS

8.1. SAFETY WARNINGS FOR MAINTENANCE STAFF

Along with adhering to general safety regulations, maintenance staff must also:

- Always use safety devices and individual safety equipment according to Directive 89/391/EEC;
- Disconnect power supply before commencing any work;
- Always use suitable tools;

- Before commencing any work on the boiler, ensure that the boiler, as well as the ashes in it, are cold, especially before touching it;
- **PELLET BOILER IS NOT TO BE CONSIDERED USABLE, IF EVEN ONE SAFETY DEVICE IS MALFUNCTIONING, INCORRECTLY REPAIRED OR NOT FUNCTIONING!**
- Do not perform any modifications of any type for whatever reason other than those allowed and/or approved by the manufacturer or authorized person.
- Always use original spare parts. Do not wait for boiler components to wear out before replacing them. Replacing a worn-out part, before it malfunctions, helps prevent injuries, caused by sudden failure of a component, which can seriously jeopardize persons and/or their property.
- When cleaning ash, also clean the combustion container and space beneath it.

8.2. SAFETY WARNINGS FOR USER

Space, where the pellet boiler will be placed, or installation area, must be in accordance with local, national and European directives.
The pellet boiler is a combustion device and external surfaces of the boiler can reach higher temperatures during operation.
The pellet boiler is a wood pellet A1 and A2 class boiler, produced exclusively for burning wood pellets (pellets of 6 mm in diameter and 30 mm in length with maximum moisture content up to 10 %) or for fuel pellet A1 and A2 (wood pellets) in accordance with standard EN 14961-2.



ATTENTION

DURING PELLET BOILER OPERATION, CHILDREN ARE PROHIBITED TO COME NEAR OR PLAY WITH IT!

When using a combustion device, it is advisable to take special care of the following:

- during boiler operation DO NOT approach it and do not touch the doors of combustion chamber, because of DANGER OF BURNS
- during boiler operation DO NOT approach it and do not touch the flue connection, because of DANGER OF BURNS
- during boiler operation DO NOT perform any kind of cleaning on the combustion device
- during boiler operation do not open the doors of the firebox, because it operates properly only when its doors are hermetically sealed (if you open the doors during operation, an alarm will sound)
- during boiler operation DO NOT remove ashes
- DO NOT allow children and animals to come near the pellet boiler
- ADHERE TO REQUIREMENTS SET FORTH IN THIS DOCUMENT

For correct use of the boiler, also heed to the following instructions:

- Use only and exclusively fuel recommended by boiler manufacturer;
- Follow instructions for maintenance;

- Clean the boiler firebox for each pellet container used (3-14 days, when the pellet boiler and ashes in it are cool);
- DO NOT use the pellet boiler in case of operation malfunction or other irregularities, abnormal noises and/or suspicious faults and IMMEDIATELY contact authorized service personnel;
- DO NOT spill water on the boiler, as well as put out fire in the combustion chamber with water;
- DO NOT lean on the boiler, as it may be unstable and could tip over;
- DO NOT use the pellet boiler as support or a fastening item. Do not leave the container cover open;
- DO NOT touch the painted surfaces of the boiler during operation;
- DO NOT use wood or charcoal in the pellet boiler, use only pellets with the following properties:
  dimension: diameter 6 mm,
  maximum length: 30 mm,
  moisture content: up to 10 %,
  combustion value: minimum 16,9 MJ/kg or 4,7 kWh/kg,
  ash content: below 0,7 %
- DO NOT use the boiler as an incinerator;
- Always ensure maximum safety.

9. INSTRUCTIONS FOR SAFE IGNITION AND CLEANING OF BOILER

NEVER use fuel oil, lamp oil or any other oil or any other flammable liquid to ignite the pellet boiler. Store all such liquids far away from the pellet boiler during operation.

Ensure that the pellet boiler is positioned properly and that it does not move.

Ensure that you have closed the firebox properly, and that it is closed during operation of the pellet boiler.

Vacuum ashes only when the pellet boiler is cool.

Do not use abrasive products to clean the pellet boiler.

9.1. REGULAR MAINTENANCE AND CLEANING OF BOILER

Use of vacuum cleaner with separator will make cleaning ashes from the boiler easier.
Before starting any kind of maintenance, also cleaning, heed to the following safety precautions:

- Shut off the pellet boiler before performing any kind of work
- Before performing any kind of work on the boiler, make sure that the ashes in the boiler are cool

Vacuum ashes from the combustion at least once every ten days or at each used pellet container (only when the boiler is cool) (***figure 10***).

Vacuum and carefully clean the combustion container at least once every ten days or at each used pellet container (only when the boiler is cool) (***figure 10***). Then shake 10x handle of the turbulators.
Once a month, remove the front door at the bottom of the exchanger on the right side of the boiler and vacuum the inside (***figure 10***).



Always make sure that the pellet boiler and ashes in it are cool.

This is the combustion container for burning pellets (***figure 9***). We recommend inspecting and cleaning ashes from the bottom of combustion chamber upon each cleaning. When you place the combustion container back in its place, make sure that it is set correctly: it must be pushed towards the back wall all the way. Only then you can be sure that the boiler will function properly.
Figure 9



Figure 10

ATTENTION

Be careful that the sealant rope under the edge of combustion chamber is not damaged. If the sealant rope is damaged, contact an authorized service centre.

If you require any explanation do not hesitate and contact your installer. Because the manufacturer has no control of the installer's work, he cannot guarantee performance of his work and maintenance.

The manufacturer shall in no way be held responsible for damages caused by third parties.

ATTENTION

Ensure that the pellet boiler and ashes in it are cool!

The combustion chamber must be cleaned after each used pellet container, vacuumed and/or emptied of all impurities remaining after the pellets have burned.

Never put pellets which have not burned back in the pellet container or ash box.

9.2. CONTROL AND PARTS REQUIRING MAINTENANCE

CHECK THE FOLLOWING ITEM AND MAKE SURE THAT THE PELLET BOILER IS OPERATING PROPERLY. THIS WILL INCREASE ITS EFFICIENCY AND THE EMITTED HEAT INTO THE SYSTEM WILL ALSO INCREASE:



Ensure that the pellet boiler and ashes in it are cool!

- For perfect cleaning, vacuum ashes from beneath the combustion container and from combustion chamber every week or at each 130 kg pellet container used (whichever comes sooner). Use a broom or a brush to clean firebox walls.
- Clean the fan for extraction of smoke gases by removing fan protection and cleaning fan blades with a broom or a brush.

GENERAL BOILER CLEANING AFTER THE END OF SEASON OR BEFORE THE START OF SEASON:



Ensure that the pellet boiler and ashes in it are cool!
Disconnect power supply!

- At the end of heating season, disconnect the boiler from electrical network. It is very important to clean and inspect the boiler, as described in the instructions.
- Door seal, fitted with high-temperature resistant fitting material, can detach after prolonged use. To reattach it, apply high-temperature fitting material on the back of the seal. This ensures hermetic sealing of firebox doors.

FLUE CONNECTION – CHIMNEY (must be cleaned at the end of each season):



Ensure that the pellet boiler and ashes in it are cool!

- Flue duct, chimney and chimney cover must be inspected and cleaned every year. Contact your chimney sweep for professional service.

9.3. ADDITIONAL MAINTENANCE

Your pellet boiler is a heat generator which uses pellets. Therefore, it requires a special type of maintenance by authorized personnel of company BIODOM 27 d.o.o. each year.
Regular annual maintenance keeps the combustion device in good condition, ensures greater efficiency, retains warranty and extends life expectancy of the device.
Type of work, described in the previous chapter, is advisable to perform after the end of heating season. Their purpose is to check and ensure flawless operation of all components.

10. IMPORTANT SAFETY INFORMATION

You have purchased a product of the highest quality.
The supplier is at your disposal in transferring required information. Correct installation of combustion device in accordance with instructions is important to prevent any poor functioning, hazard or risk of fire.

Pellet boiler operates on the basis of negative pressure in the combustion chamber. Therefore, always ensure that the flue connection is thermally sealed.



ATTENTION

In the event of fire in the flue pipe, all persons and animals must leave the area, then immediately disconnect power supply from the main switch or socket (if it is possible without risk) and call the fire department.



ATTENTION

Do not use fine cut wood to ensure operation and safety of the boiler.



ATTENTION

Do not use the pellet boiler as an incinerator.

---

11. PELLET QUALITY IS VERY IMPORTANT

The pellet boiler is designed for use with pellets. Because the market offer many types and dimensions of pellets, it is very important to obtain pellets free from impurities. Make sure that you use only pellets that are compact and dust-free. Ask your supplier for suitable pellets with 5 mm diameter 30 mm length. Proper operation of the pellet boiler depends on the type and quality of pellets.

Pellets are filled in the pellet container from above through the opening in foldable cover of the container (***figure 11***). Make sure that, during filling, no hard objects foil or other objects that could interfere with the operation of dosing screw, do not enter the pellet container.

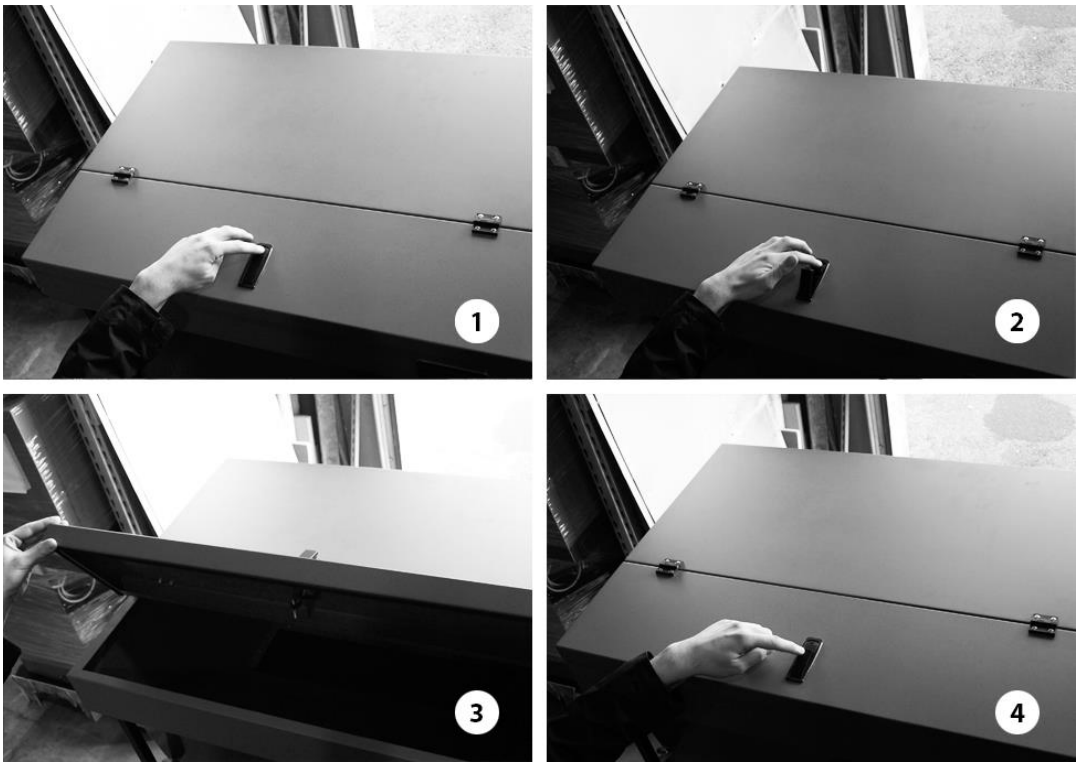

Figure 11

ATTENTION

Persons with back injuries and pregnant women should avoid lifting pellet bags.

ATTENTION

The manufacture shall in no way be held liable for damages arising from the use of poor quality pellets, as well as for poor functioning of the boiler due to poor quality of used pellets.



ATTENTION

Pellets should be in accordance with DIN 51731, DIN plus, Ö-Norm M-7135 or other comparable European standards.

11.1. STORING PELLETS

Pellets must be stored in a dry and not too cold place.
Cold and damp pellets (temperature about 5 °C) reduce thermal power and require more frequent boiler cleaning.



ATTENTION

PELLETS SHOULD NOT BE STORED NEAR THE PELLET BOILER. Keep them at least 1/2 metre away.

When handling pellets, be careful not to scatter them.
If you fill the pellet container with sawdust, it can block the pellet dosing system.

12. DESCRIPTION AND OPERATION OF CONTROL DEVICE

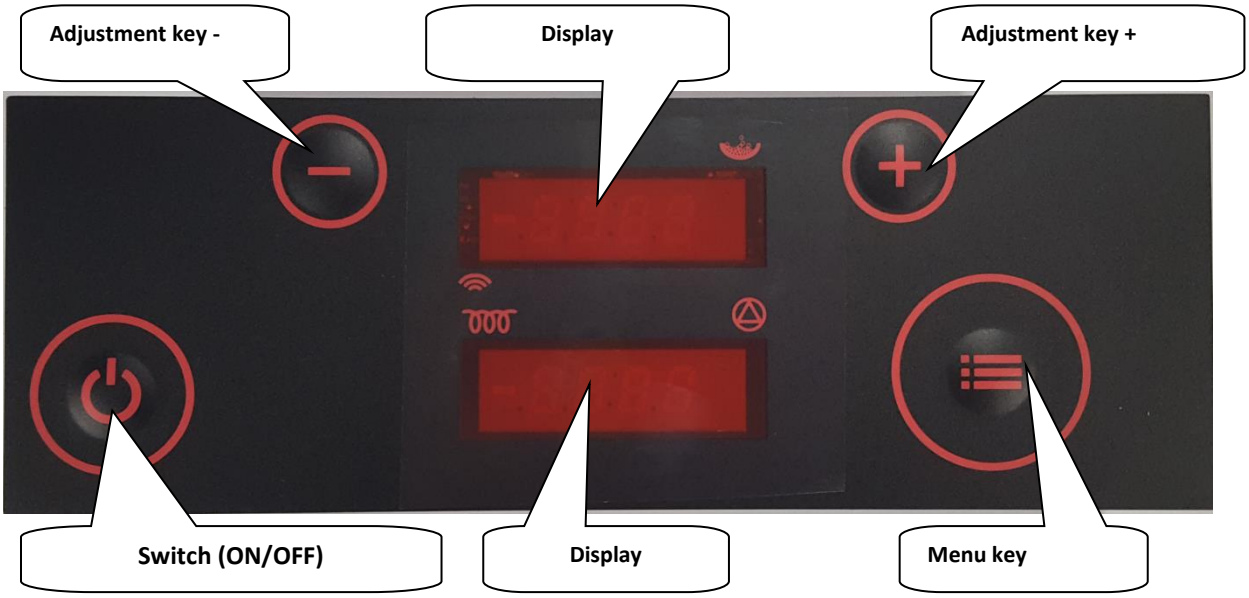

Display	Function
	**upper display** shows boiler status, chosen menu and indicates dosing operation and operation in time programme
	**lower display** shows current time, value of settings and parameters and warning names
	spark plug operation indicator
	pump operation indicator
	dosing operation indicator

Display during boiler operation in burning phase

Upper display:	upper display alternately shows: BURN and then P5D5, where Px means actual current operation power and DX set operation power
Lower display:	lower display alternately shows: Temperature of smoke gases: 155 Temperature of water in the boiler: B72 Temperature of return water: r45

Display during boiler standstill:

Upper display:	OFF
Lower display:	Time: 18:35

Button	Function
	**ON/OFF button** Press and hold to turn the boiler on/off. Short press to return to basic display.
+	**Button UP** Press during operation to increase set power. When pressing MENU button beforehand, this button increases desired water temperature in the boiler. In menu mode, we select desired submenu by pressing.
-	**Button DOWN** Press during operation to decrease set power. When pressing MENU button beforehand, this button decreases desired water temperature in the boiler. In menu mode, we select desired submenu by pressing.



MENU button

Short press in basic display shows set value of water temperature in the boiler, which can then be modified with buttons + and -.

Press and hold for at least 2 seconds to activate menu mode.

Press and hold for at least 4 seconds to enter advanced menu settings. Subsequent pressing of the button display menu choices.

Use buttons + and - to select parameters in submenus. Short press MENU button and set value of parameter starts flashing, which can then be modified with buttons + and -.

Short press ON/OFF button and hold MENU button to scroll all menu choices and return to basic display.

12.1. BOILER DURING OPERATION

The display shows current operation phase (e.g. TestFire, HeatUp etc.). Upper display shows set and actual boiler power alternately every 5 seconds.

Press **button +** to increase set power value, and press **button –** to decrease it.

Press **MENU button** to display set water temperature in the boiler. You can modify it with **buttons + and -**.

The boiler operates at set power, until water temperature in the boiler reaches modulation threshold or until smoke gases reach limits. In first case, Regu H20 is displayed, and in second Regu Gas.

In case of power outage for less than 2 minutes, the boiler resumes normal operation when power supply restores. If the outage lasts more than 2 minutes, the boiler automatically performs safety shutdown and cooling and then restarts.

12.2. BOILER SHUTDOWN

When pressing and holding the **ON/OFF button** for more than half a second (during boiler operation), the display shows **ON**, and the boiler starts shutdown sequence once the button is released. Dosing screw turns off and the display indicates **STOP FIRE**. Fans operate at high speed to prevent excessive increase of water temperature in the boiler. When the boiler cools down under set temperature, fans switch to maximum speed and blow out the last parts from the firebox. Display indicates **OFF.**

12.3. BOILER ACTIVATION

When pressing and holding the **ON/OFF button** for more than half a second (boiler at standstill), the display shows **OFF**, and the boiler begins activation sequence once the button is release. Display indicates **TESTFIRE**. Fans operate at high speed to clean the firebox. Dosing screw is at standstill, spark plug is heating.
If the firebox temperature is low, sequence **HEAT UP** begins, where pellets are dosed quickly and fans stand still. Then sequences **Fuel IGNI** and **TEST IGNI** start, until the boiler reaches conditions for transition to burning phase (**BURN**).

ATTENTION

By pressing and holding **MENU button** for 2 seconds (release the button when tH20 displays), the display indicates current water temperature in the boiler. By pressing **button UP** or **button DOWN** you select display of other temperatures and fan status .

12.4. TIME PROGRAMME SETTING

On your boiler you have the option of setting a daily-weekly timer. You can program up to 3 time framed ON/OFF for each day. To set a daily-weekly timer on the boiler, you need to do the following:

1. By pressing the MENU button (until CLOCK is displayed), the MENU timer for the setting timer control opens.

2. By pressing the + button, we come to the TEN option. Selecting the ON or OFF function switches ON/OFF the time control of the program.

3. Each of the 6 time programs for 7 days, which you can adjust according to your needs, is limited to the initial (P1A - program 1 start time) and closing time (P1D - program 1 end time).

4. The P1 t symbol allows you to adjust the water temperature for each program (located on the top display), for example for t H20 1 (located on the lower display) of the first program, you have the P1t, etc.

5. By pressing the + button, you arrive at the time schedule for each day of the week. For example, on Monday, the DAY1 is displayed on the top display, and on the lower T1P1, T2P2 and T3P5 (which we find to by pressing the MENU button), which means that the boiler will work on time programs in P1, P2 and P5 on Monday.

If we do not want a 3 time switch ON/OFF, it is necessary to deactivate the other timed framed programs.

For example, if there are two time periods for DAY7, then the next program should continue

T1P1, T2P4, T3P0 (P0 tag, indicates that the program is not active).

By selecting the ON/OFF option or by pressing the MENU button, you can exit the program.

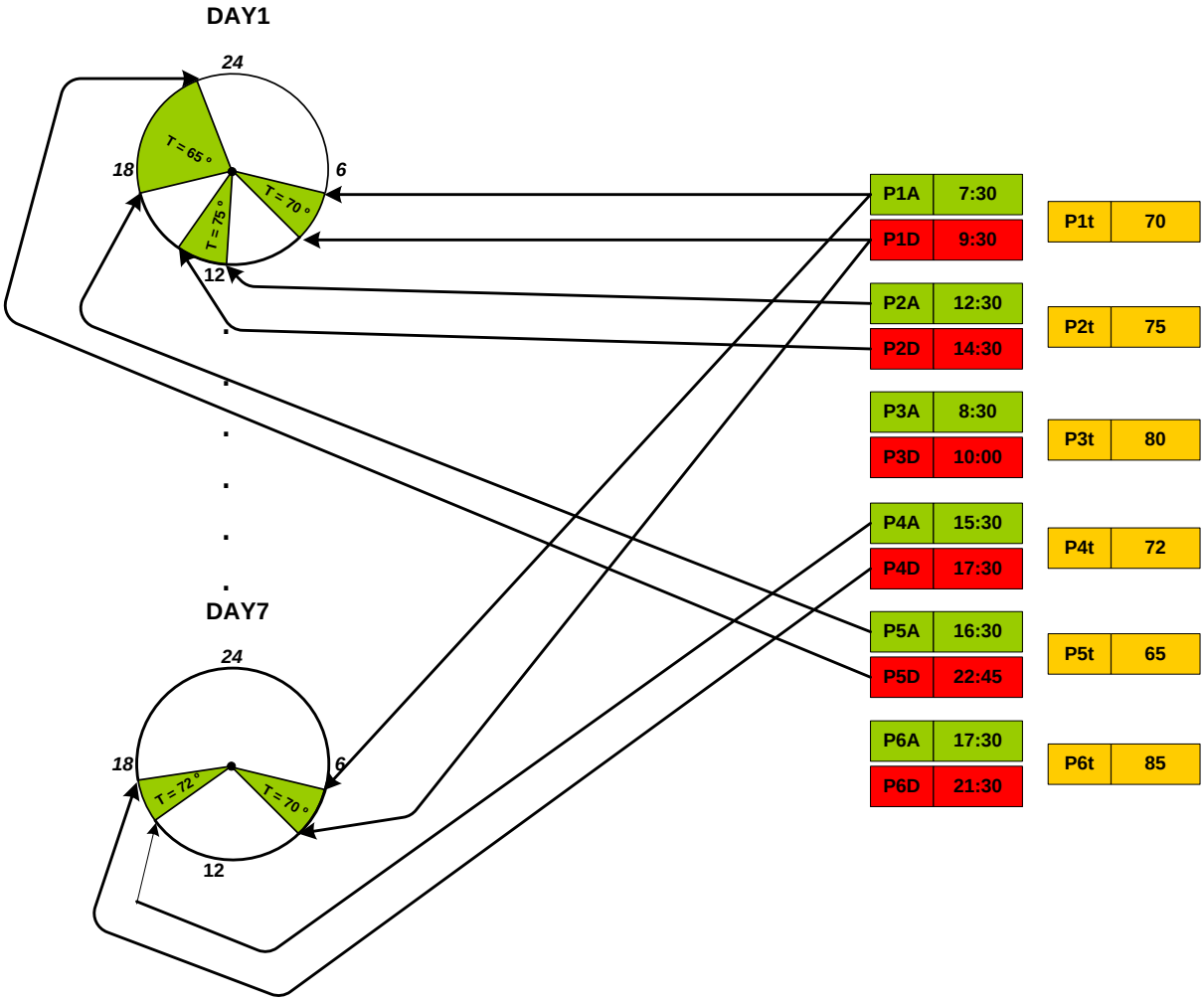

Figure 12: Diagram of timer settings

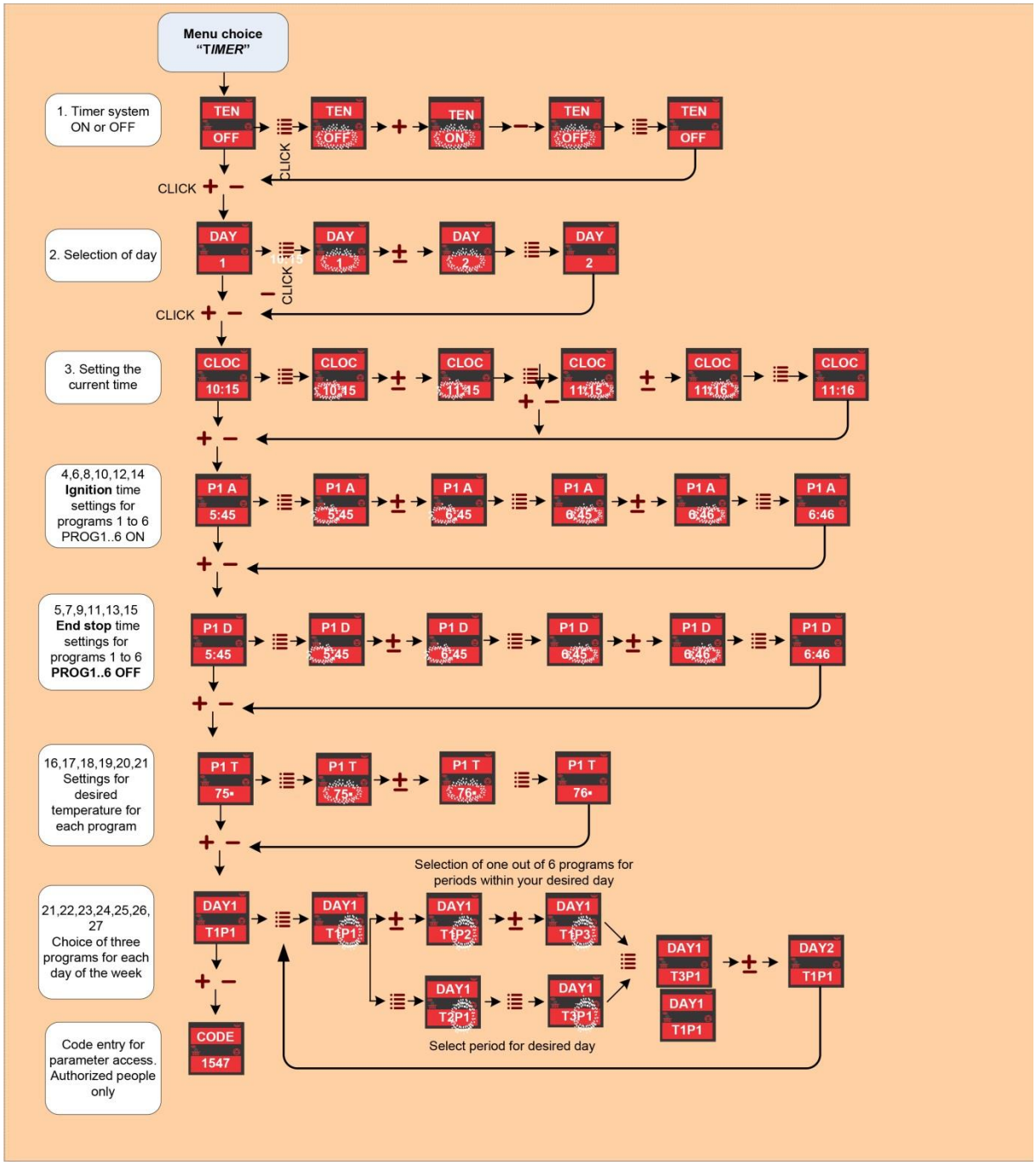

Figure 13: Navigation through the timer Manu

13. INDICATIONS AND MESSAGES ON DISPLAY

Indication on display	Explanation of message and status of the boiler
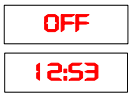	The boiler is at a standstill.
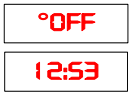	The boiler is at a standstill, but the time programme is active and will start automatically, as set with time programme.
	The boiler checks if there is a flame in the firebox and for proper combustion this sequence starts after power supply outage.
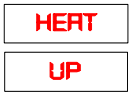	In ignition phase, when the dosing screw filled the firebox, spark plug heats pellets to ignition.
	After Heat up phase, the boiler ignites pellets. No dosing in this phase.
	At the end of ignition phase, the boiler shuts off the spark plug and tests, if the ignition was successful and if combustion is correct and temperatures rise correctly.
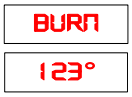	Burning phase (normal work phase). Lower display shows temperature of smoke gases at exit from the boiler.
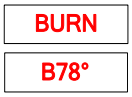	Burning phase. Lower display shows water temperature in the boiler.
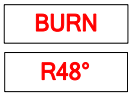	Burning phase. Lower display shows temperature of return water.
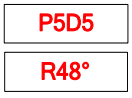	Burning phase. Upper display shows current power of the boiler (Px) and set power of the boiler (Dx).
	Cleaning phase. Fans blow out ash and other residues from the firebox. This phase starts automatically from time to time during burning phase.
	The boiler is in stopping sequence and is cooling down.

COOL FLUID	When water temperature in the boiler, even with minimum power, reaches set temperature, the boiler enters phase COOL FLUID and cools down. The boiler restarts automatically when the water in the boiler cools down under set value.
ALAR PEL	Lack of pellets in burning phase.
ALAR FIRE	Unsuccessful ignition. Check boiler status, clean firebox and try to reignite the boiler.
ALAR STB	Thermal safety activated. Check boiler status and, if no anomalies are determined, manually reactivate safety and restart the boiler, or contact the service centre.
ALAR PRES	Safety pressure control activated. Check boiler status and, if no anomalies are determined, restart the boiler, or contact the service centre.
ALAR TC1	No signal of smoke gases sensor. Contact the service centre.
ALAR TCH	No signal of firebox temperature. Contact the service centre.
ALAR Air	No signal of flow sensor or the fans do not operate properly. Contact the service centre.
ALAR dirtY	Clean the boiler and/or flue.
ALAR NTC	No signal of water temperature. Contact the service centre.
ALAR GASS	Temperature of smoke gases is too high.

14. MENU

When holding MENU button, menus scroll. To select a certain menu, release the button when it is displayed. Descriptions of individual menus are provided below:

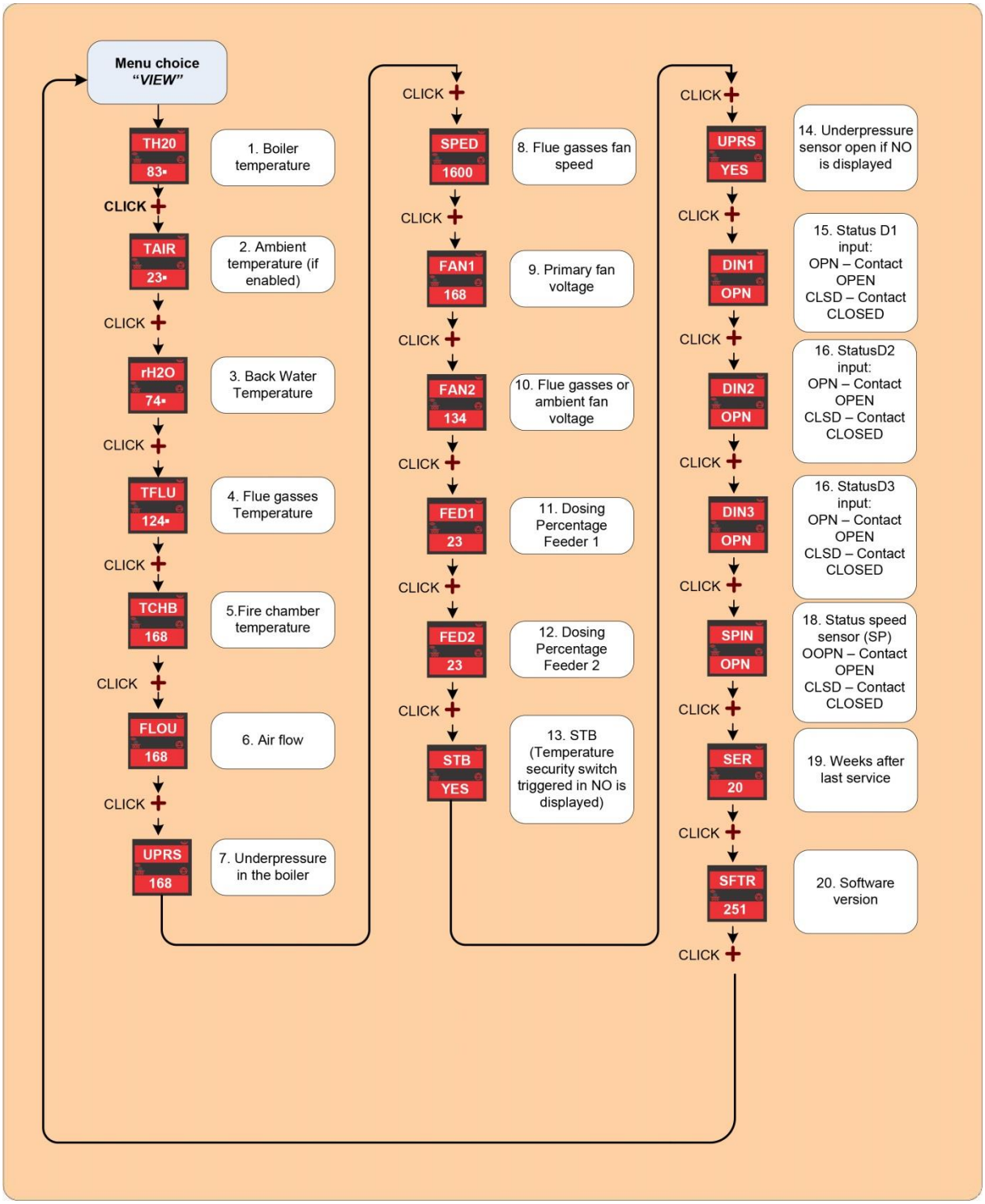

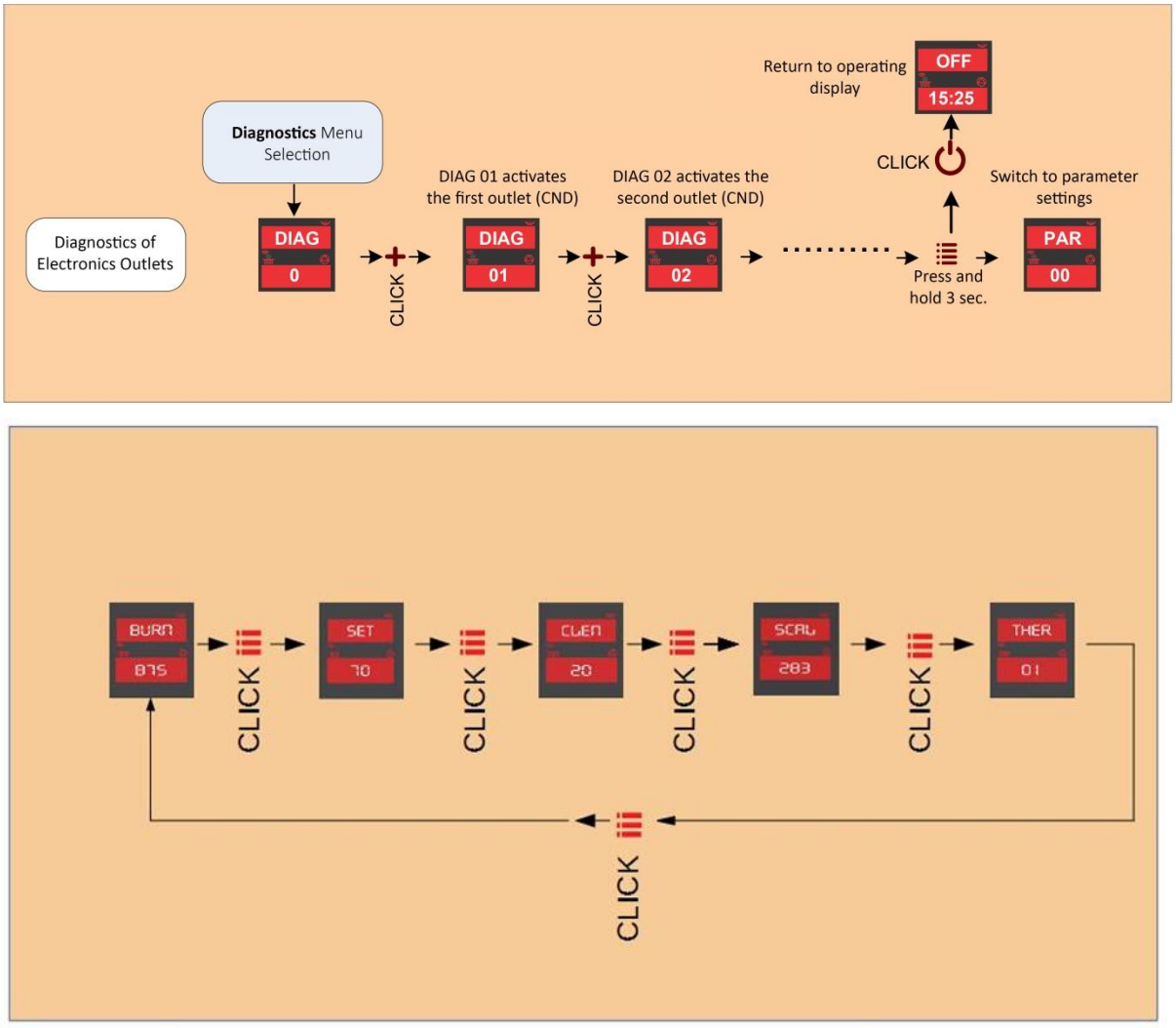

Figure 14: Menu description

15. ALARM STATUSES

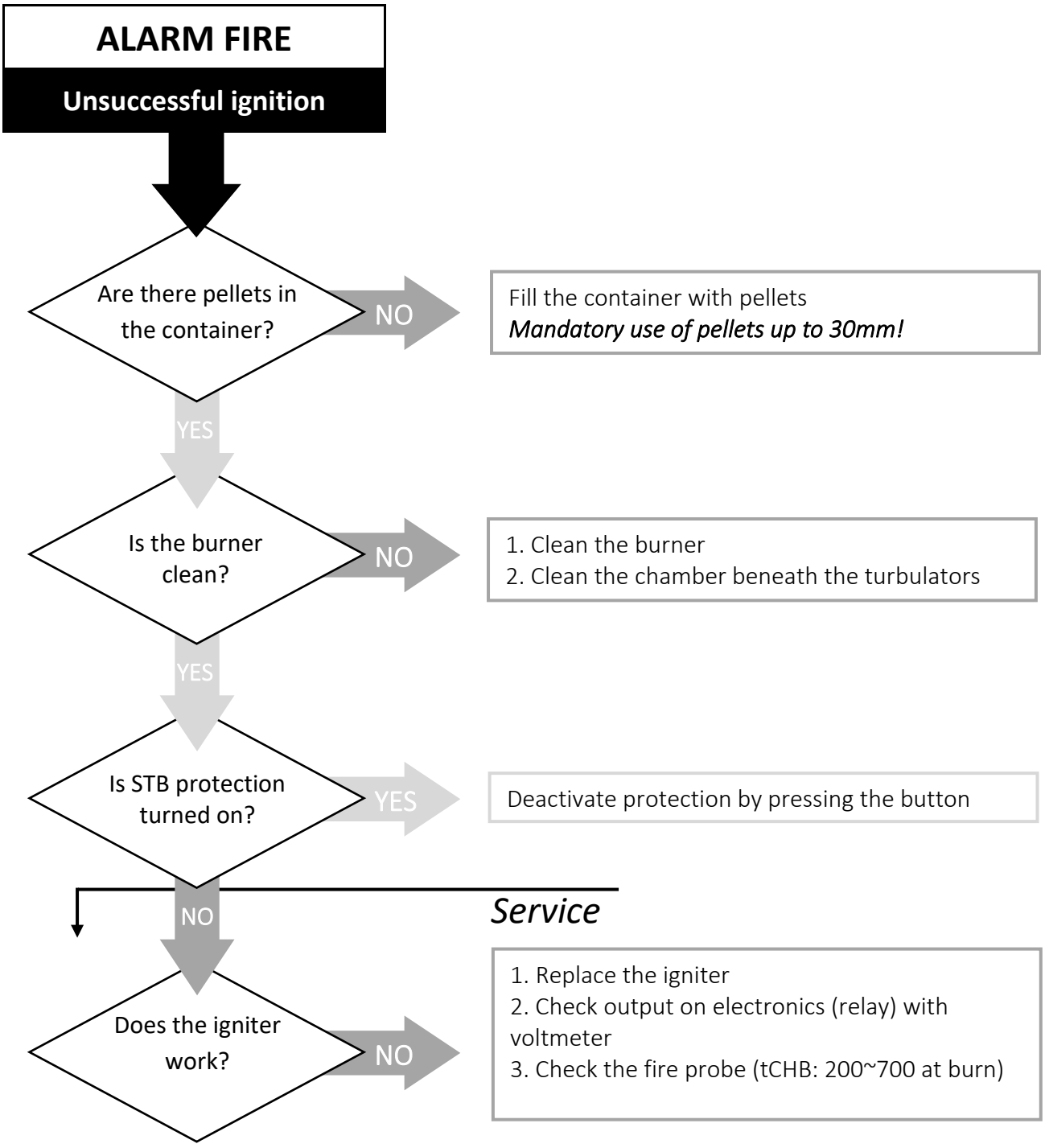

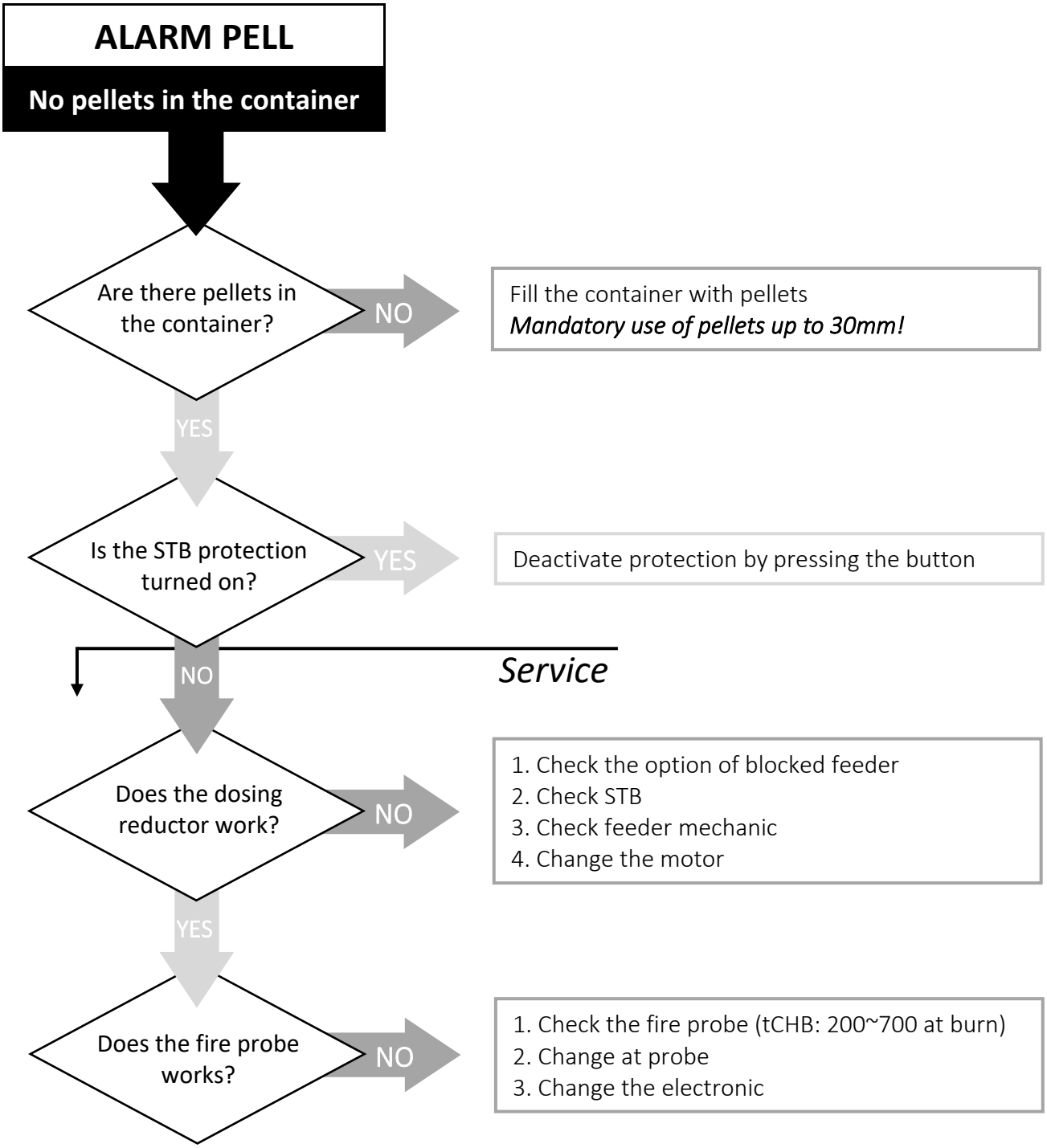
ALARM PELL
No pellets in the container
Are there pellets in the container?
NO
Fill the container with pellets
Mandatory use of pellets up to 30mm!
YES
Is the STB protection turned on?
YES
Deactivate protection by pressing the button
NO
Service
Does the dosing reductor work?
NO
1. Check the option of blocked feeder
2. Check STB
3. Check feeder mechanic
4. Change the motor
YES
Does the fire probe works?
NO
1. Check the fire probe (tCHB: 200~700 at burn)
2. Change at probe
3. Change the electronic

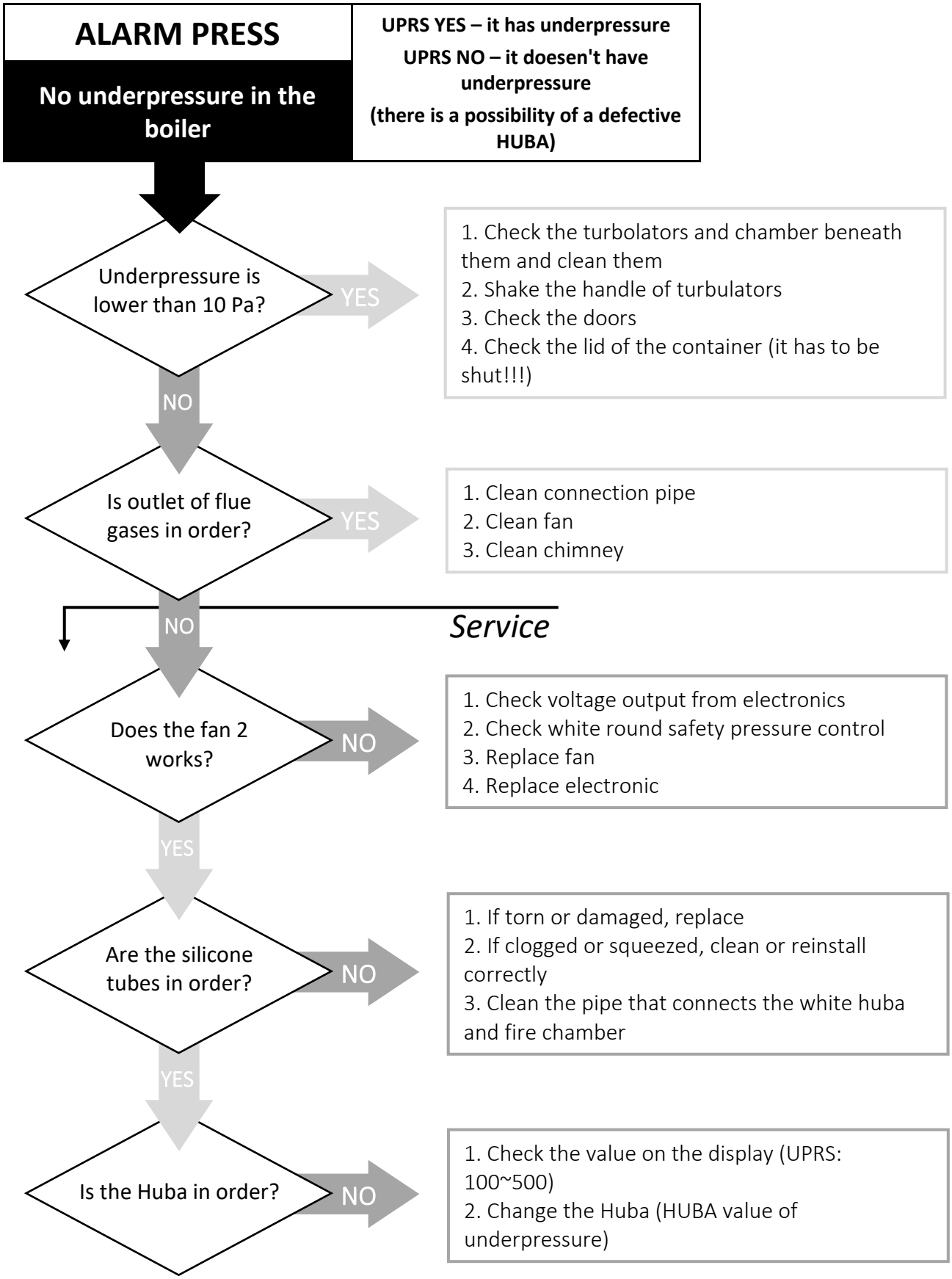
ALARM PRESS
No underpressure in the boiler
UPRS YES – it has underpressure
UPRS NO – it doesen't have underpressure
(there is a possibility of a defective HUBA)
Underpressure is lower than 10 Pa?
YES
1. Check the turbolators and chamber beneath them and clean them
2. Shake the handle of turbulators
3. Check the doors
4. Check the lid of the container (it has to be shut!!!)
NO
Is outlet of flue gases in order?
YES
1. Clean connection pipe
2. Clean fan
3. Clean chimney
NO
Service
Does the fan 2 works?
NO
1. Check voltage output from electronics
2. Check white round safety pressure control
3. Replace fan
4. Replace electronic
YES
Are the silicone tubes in order?
NO
1. If torn or damaged, replace
2. If clogged or squeezed, clean or reinstall correctly
3. Clean the pipe that connects the white huba and fire chamber
YES
Is the Huba in order?
NO
1. Check the value on the display (UPRS: 100~500)
2. Change the Huba (HUBA value of underpressure)

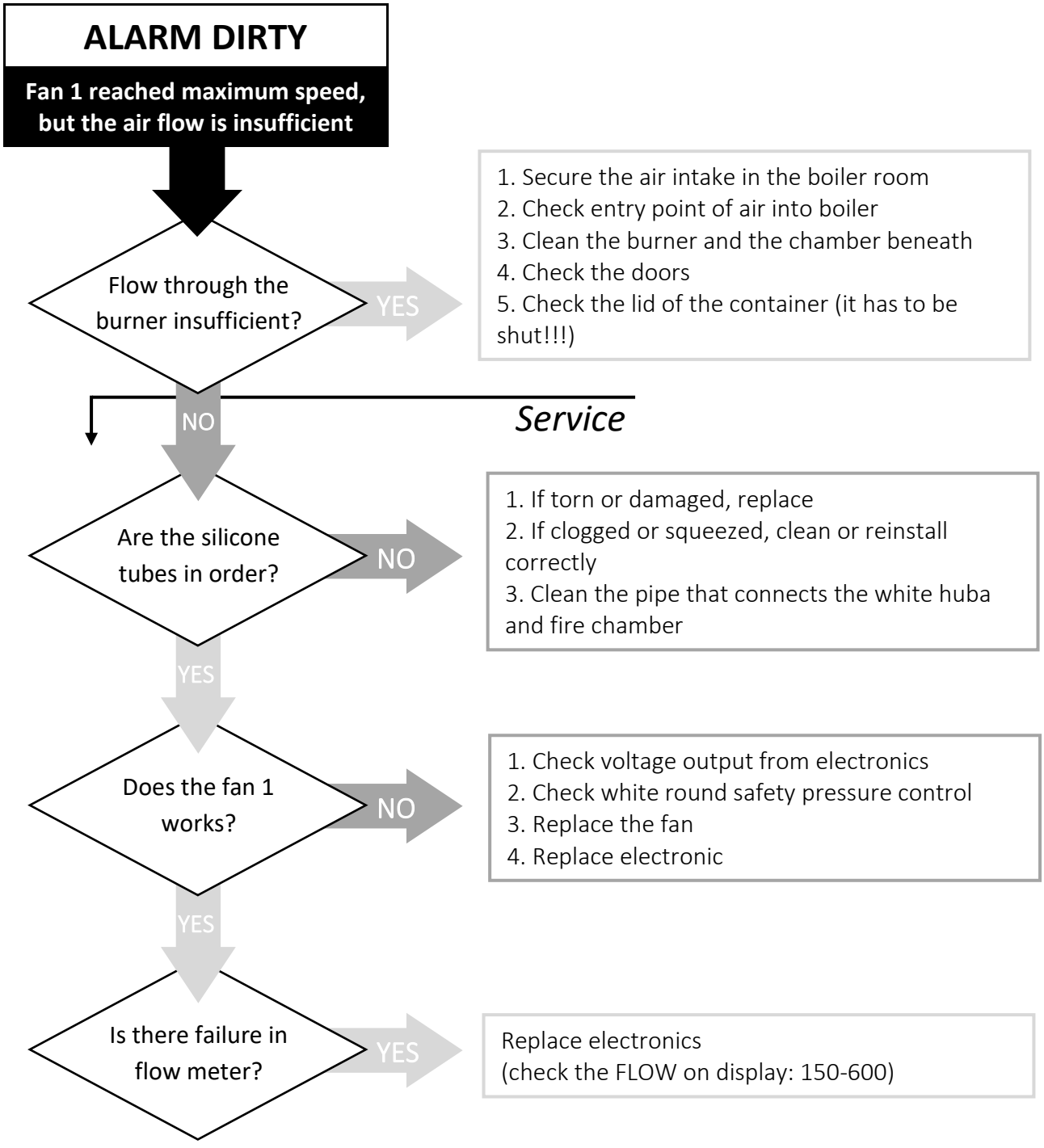
ALARM DIRTY
Fan 1 reached maximum speed, but the air flow is insufficient
Flow through the burner insufficient?
YES
1. Secure the air intake in the boiler room
2. Check entry point of air into boiler
3. Clean the burner and the chamber beneath
4. Check the doors
5. Check the lid of the container (it has to be shut!!!)
NO
Service
Are the silicone tubes in order?
NO
1. If torn or damaged, replace
2. If clogged or squeezed, clean or reinstall correctly
3. Clean the pipe that connects the white huba and fire chamber
YES
Does the fan 1 works?
NO
1. Check voltage output from electronics
2. Check white round safety pressure control
3. Replace the fan
4. Replace electronic
YES
Is there failure in flow meter?
YES
Replace electronics
(check the FLOW on display: 150-600)

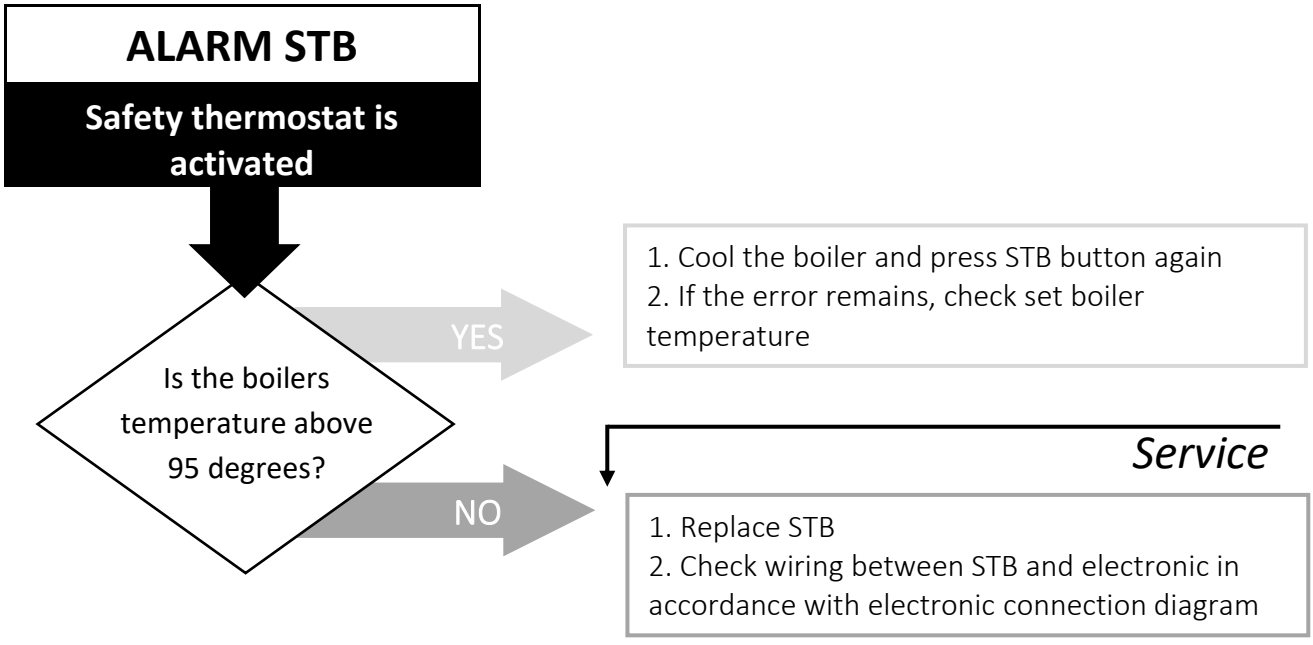
ALARM STB
Safety thermostat is activated
Is the boilers temperature above 95 degrees?
YES
1. Cool the boiler and press STB button again
2. If the error remains, check set boiler temperature
NO
Service
1. Replace STB
2. Check wiring between STB and electronic in accordance with electronic connection diagram

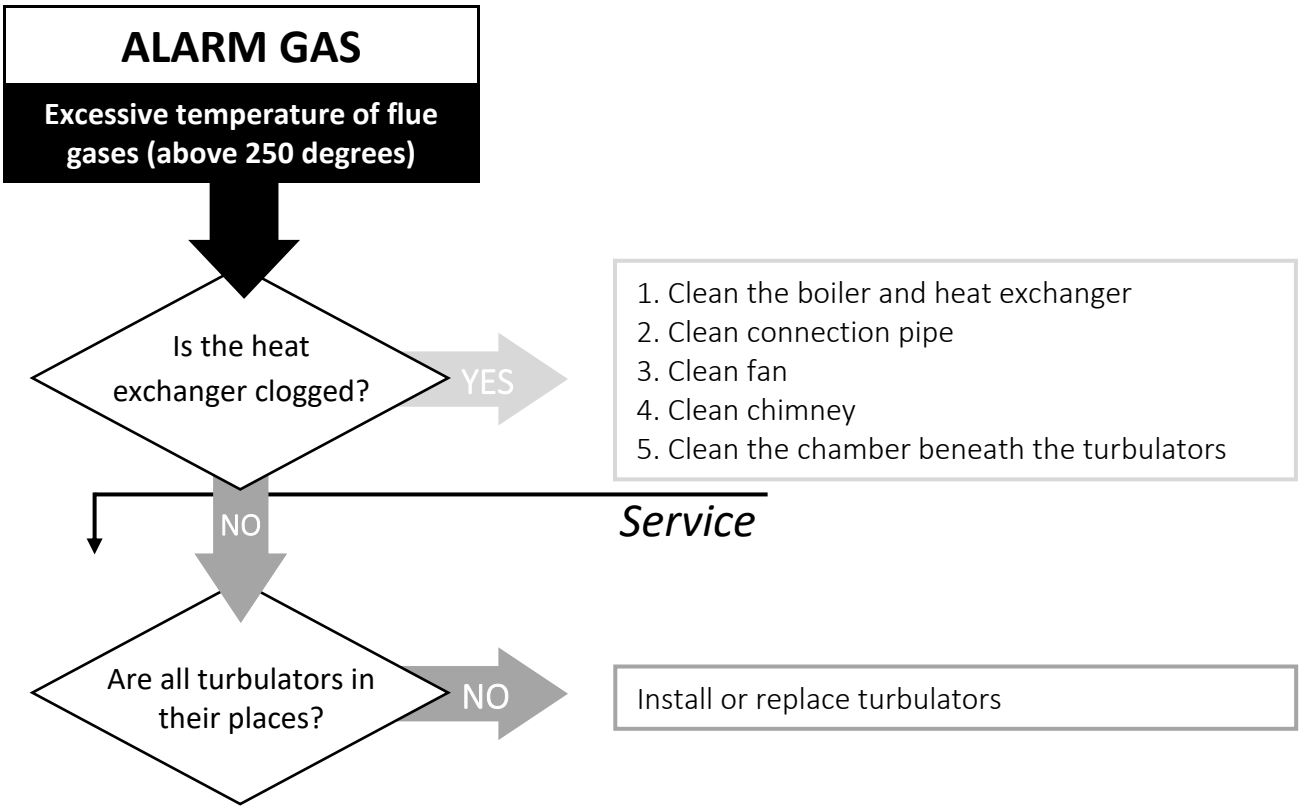
ALARM GAS
Excessive temperature of flue gases (above 250 degrees)
Is the heat exchanger clogged?
YES
1. Clean the boiler and heat exchanger
2. Clean connection pipe
3. Clean fan
4. Clean chimney
5. Clean the chamber beneath the turbulators
NO
Service
Are all turbulators in their places?
NO
Install or replace turbulators

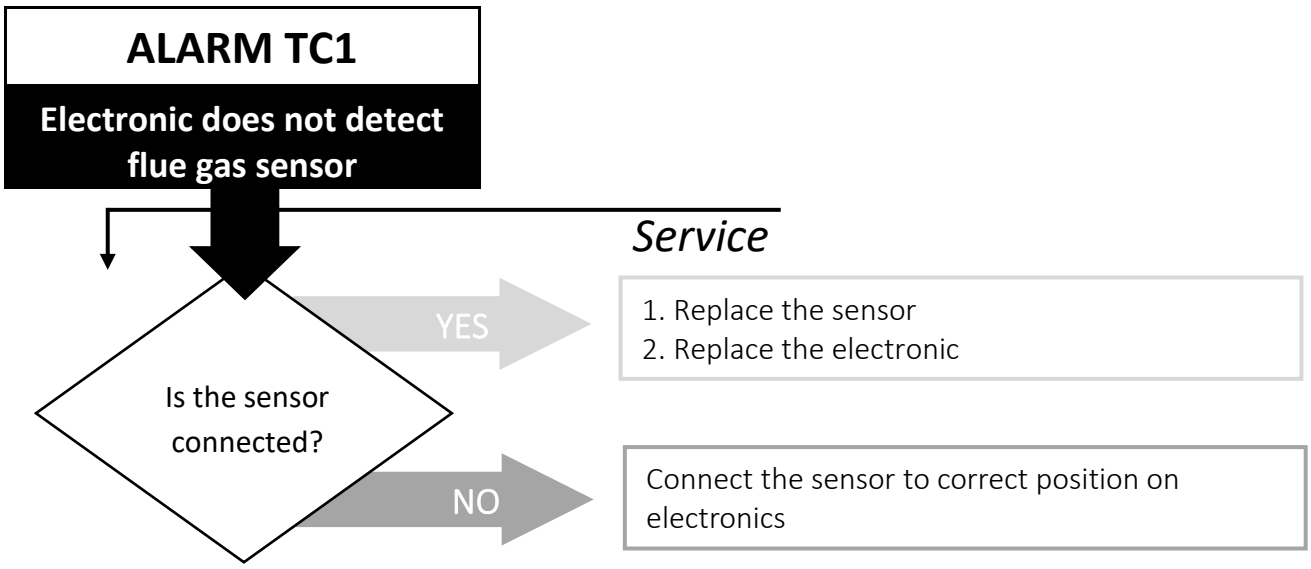
ALARM TC1
Electronic does not detect flue gas sensor
Service
Is the sensor connected?
YES
1. Replace the sensor
2. Replace the electronic
NO
Connect the sensor to correct position on electronics

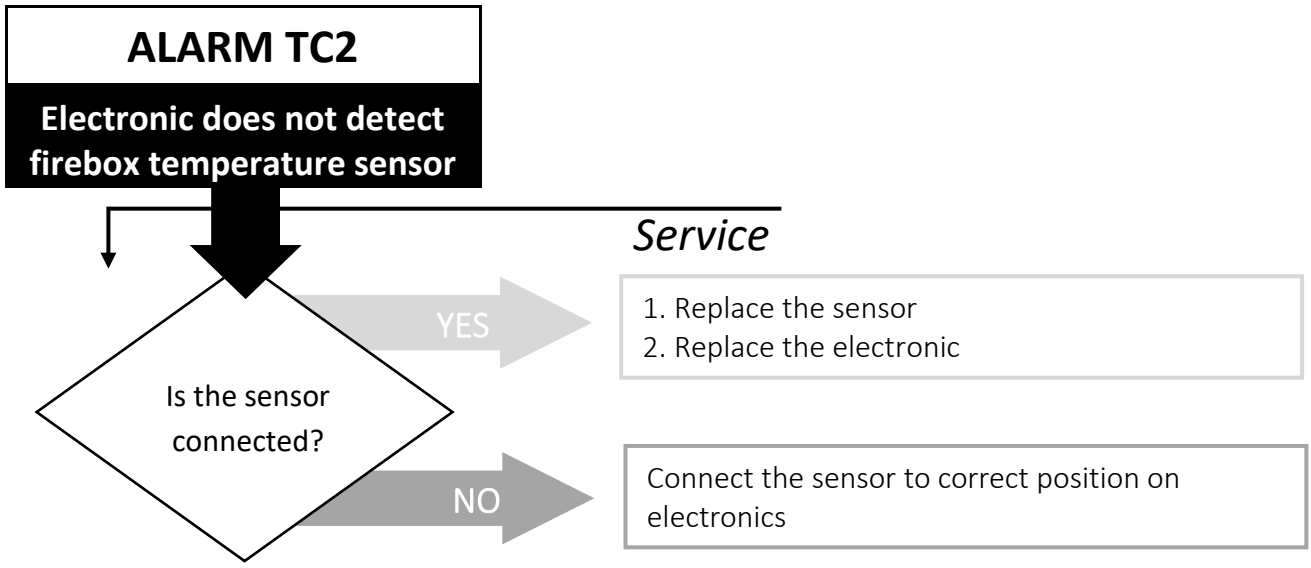
ALARM TC2
Electronic does not detect firebox temperature sensor
Service
Is the sensor connected?
YES
1. Replace the sensor
2. Replace the electronic
NO
Connect the sensor to correct position on electronics

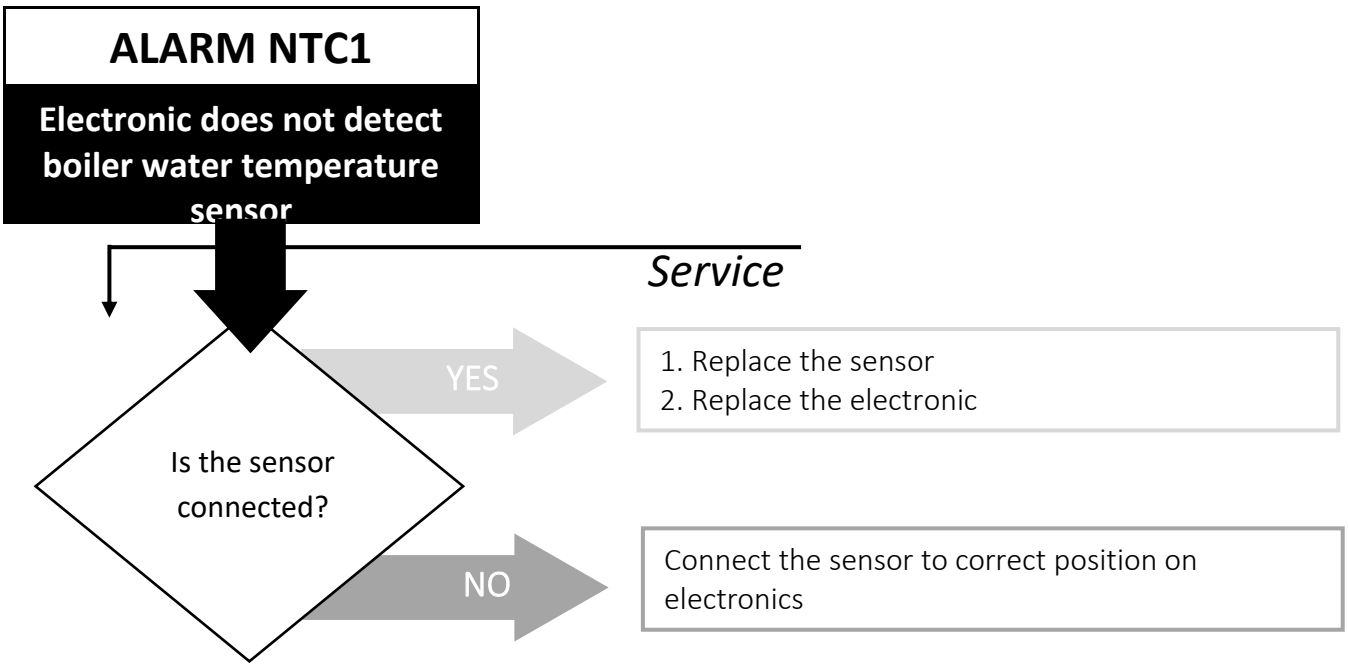
ALARM NTC1
Electronic does not detect boiler water temperature sensor
Service
Is the sensor connected?
YES
1. Replace the sensor
2. Replace the electronic
NO
Connect the sensor to correct position on electronics

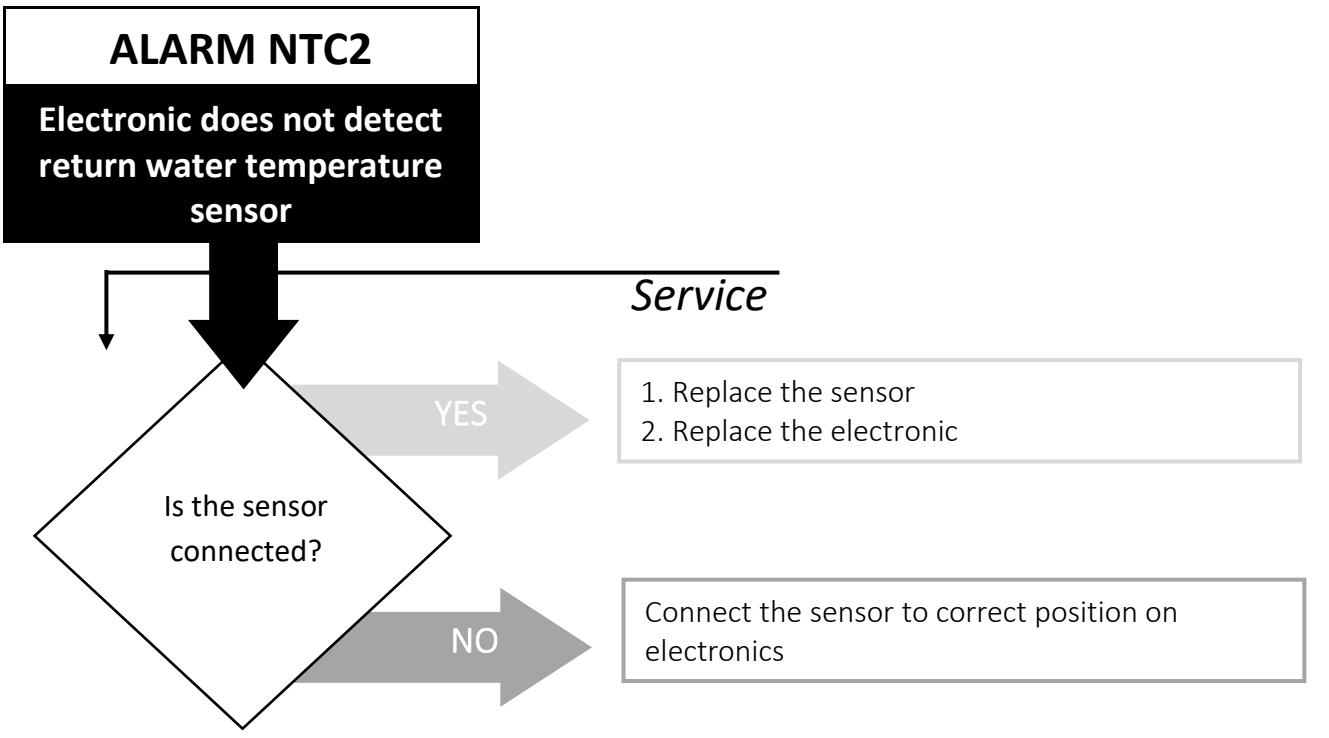
ALARM NTC2
Electronic does not detect return water temperature sensor
Service
Is the sensor connected?
YES
1. Replace the sensor
2. Replace the electronic
NO
Connect the sensor to correct position on electronics

16. INFORMATION REGARDING DESTRUCTION AND DISPOSAL OF BOILER

Destruction and disposal of pellet boiler is sole responsibility of the owner, who must act in accordance with laws in force in his country regarding safety, respect and protection of environment. Destruction and disposal of pellet boiler can be entrusted to a third person with licence or authorization for disposal and destruction of aforementioned materials.

INDICATION: in any case, you must adhere to and respect laws in force in the county in which the pellet boiler is installed.



ATTENTION

All disassembled parts must be properly disposed of:

- **remove all electrical parts;**
- **disconnect the battery from control device;**
- **dispose of the battery of control device in accordance with norms in appropriate containers;**
- **dispose of the boiler core or sell it as scrap metal.**

ATTENTION

Disposed pellet boiler in accessible areas can present a serious danger for people and animals. Owner of the boiler is always responsible for damage caused.

Once the boiler is destructed, CE mark, Instructions for use, maintenance and installation and other documents regarding the boiler must also be destroyed.

17. INSTRUCTIONS FOR INSTALLERS

This part of the instructions is intended solely for installer and contains all key information for installation and connection of combustion device Biodom 21.

18. BOILER CONNECTION INSTRUCTIONS

To connect boiler Biodom 21 to central heating system you must check:

- It is necessary to take into account the installations of non-return valve spring (or other locking elements) which automatically prevent uncontrolled circulation of the heating medium through the boiler by natural gravitational path.

- Correct installation of pipelines of central heating (pipeline dimensions, air extraction, pipe system functionality, adequacy of heating system according to boiler power).
- Distribution units (pump functionality, closing valves functionality, electrical zone valves functionality, mixed valves functionality…).
- Ensured inlet of air into the space where Biodom 21 combustion device is installed. Inlet must be executed in a manner, so that it cannot be closed and must, at any moment, enable supply of fresh air – oxygen for burning into space. Unsuitable solutions are slightly opened windows or open doors, supply of air through a duct along the flue from the roof is also unsuitable.
- Voltage of electrical connection for combustion device Biodom 21 must be 230 V / 50 Hz (given in technical data for boiler Biodom 21).
- Inspection of outlet of smoke gases – flue. Condition for connection is consent **from chimney sweep**, with which a chimney sweep ensure suitability of the flue for combustion device Biodom 21.

In placing and connecting the combustion device to central heating system, the installer must adhere to the following:

- Boiler Biodom 21 must be positioned horizontally, in length and depth.
- Distances, according to the enclosed drawing, must be regarded (see ***figure 1***).
- In cases of older installation on return line to combustion device Biodom 21, a cleaning element with closing valves is installed.
- Boiler Biodom 21 is fitted with safety valve of 2.5 bar on return line. Installer must ensure proper size of expansion container for volume of heating water in the system (size of expansion container must be dimensioned minimum of 10 % of water volume in system "150 litres of heating water in the system, minimum volume of expansion container must be 15 l". expansion container must be installed on combustion device Biodom 21 without closing elements.
- A filling release tap must be installed on the right side of the boiler, on connection DN20 (see ***figure 15***).
- Minimal pressure of heating water in boiler of 0.7 bar is ensured.
- In case where there are many heating loops (two direct loops or mix loops for radiator heating, boiler heating, convector heating), **connection scheme nr. 3** is always used, where it is necessary to use a hydraulic switch and pump on boiler loop, which is electrically connected to cable "pump" from the boiler (see ***figure 8***).

- Boiler must be fitted with pressure gauge for pressure of heating water in the boiler, i.e. on pipeline before each closing valve (enable that the pressure gauge indicates pressure in the boiler and system; in the time of filling "there cannot be a closing element, which could prevent indication of pressure in the boiler in the time of filling"). On the right side of Biodom 21 is a provided DN20 connection for filling release tap. Filling release tap is intended for filling or emptying the heating system and boiler.
- When connecting the boiler Biodom 21 to central heating system you must use mechanical elements, which prevent uncontrolled circulation of hot heating water through the boiler (gravity block, spring non-return valve, solenoid zone valve, electromotor zone valve...). goal of protection is to ensure amount of heating water flow through the boiler (minimal flow through the boiler must be over 300 l/h).
- When distribution of heating water is regulated by three-way mix valve (floor heating, weather controlled regulation, where water flow on boiler heating loop is reduced), the system is executed with fitted hydraulic switch and pump on primary-boiler heating loop, pump on boiler heating loop must be controlled by boiler regulation, which already has a factory produced electrical connection for pump.
- When a three-way mix valve is used (for floor or radiator heating, only in case of only one mixing heating loop), connection of boiler Biodom 21 is always executed according to **scheme nr. 3**, where a hydraulic switch and a pump are built into the installation on heating cycle with non-return valve (pump is connected to black cable from combustion device).
- Flue connection must executed in accordance with instruction limiting maximum length of connection pipe Ø 80 (5 m) and that 90-degree joints are considered as resistance on connection, which reduces length of connection pipe for 1 m (example: if there are 2 joints on flue connection, the connection cannot exceed length of 3 m). Flue connection must be fitted with joints with inspections holes for cleaning (see ***figure 3***). Joints must be out of at least 3 segments (joints with three or more segments enable smooth flow of smoke gases through joint), it is prohibited to use joints with two segments (joints with two segments creates resistance in flow of smoke gases) (see ***figure 6***).
- If the flue connection is longer as set forth in the instructions, the installer must use a reducing element (from Ø 80 female connection to Ø 130 female connection) immediately behind the fan, and the connection must be made with a pipe Ø 130 (see ***figure 16***).
- Electrical connection of boiler must be performed with a cable (see ***figure 8***) in accordance with instructions. The boiler must not be connected to power supply with a plug – it must be connected directly to network by a toggle switch, breaking live and neutral wire. (see ***figure 17***).
- Electrical connection of distribution elements (pumps, solenoid valves, electromotor valves...) must be executed in accordance with the scheme in the instructions, i.e. supply for distribution elements must be executed from connection cable on the boiler (cable "pump") (see ***figure 8***).
- Combustion device Biodom 21, pipes of central heating and flue connection (see ***figure 18***) must be earthed in accordance with professional regulations (earthing conductor with minimum cross-section 4mm^2).

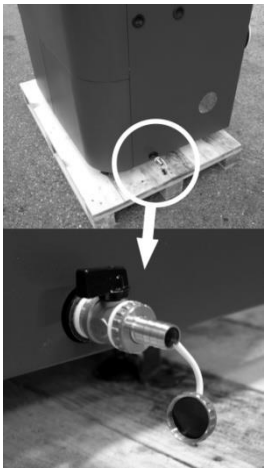

Figure 15



Figure 16

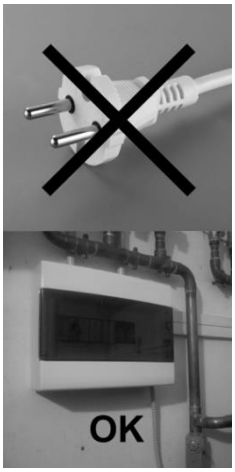

Figure 17



Figure 18



Figure 19: Activating thermal safety

18.1. SCHEME OF ELECTRONIC CONTROL PANEL OF THE BOILER

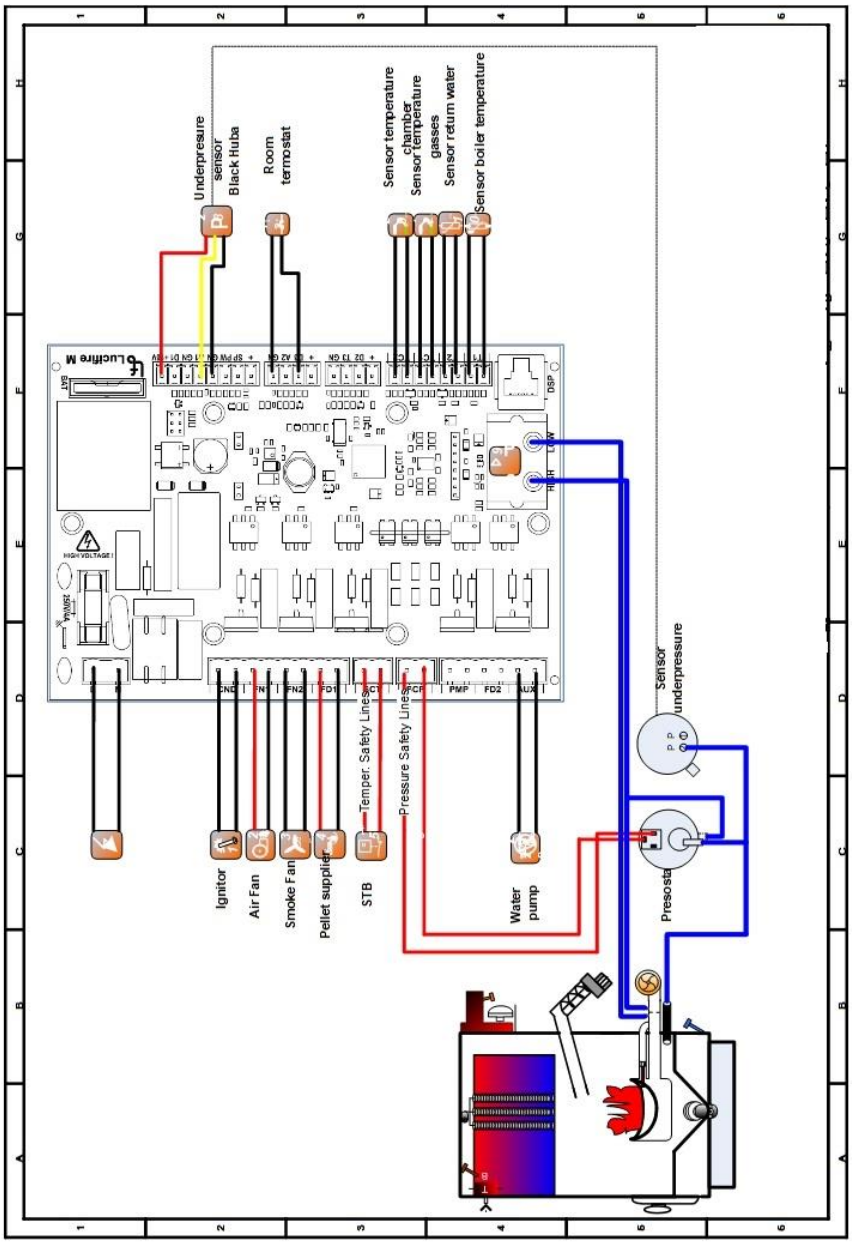

Figure 20

18.2. SCHEME NR.1: HEATING ONLY

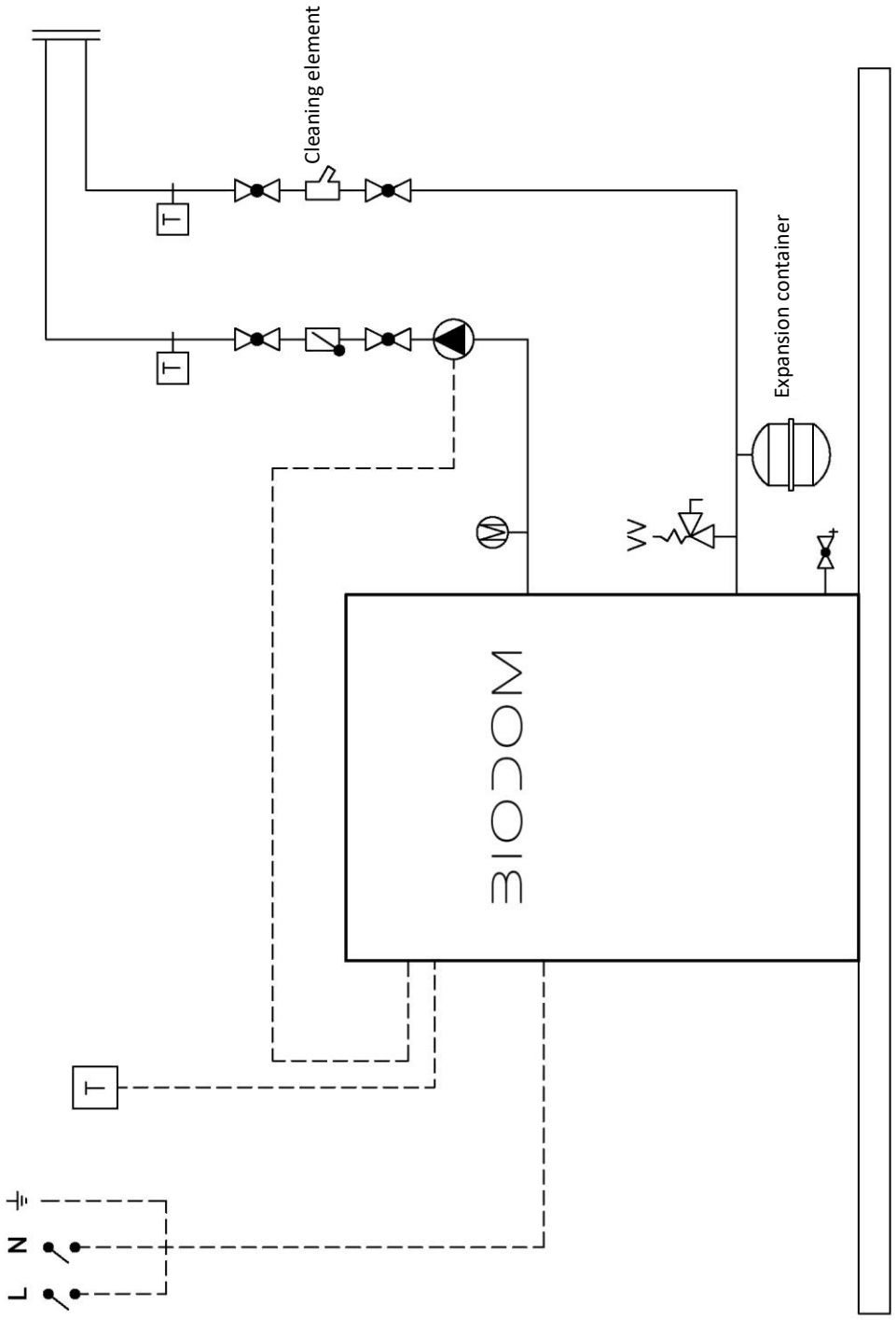

Connection scheme 1

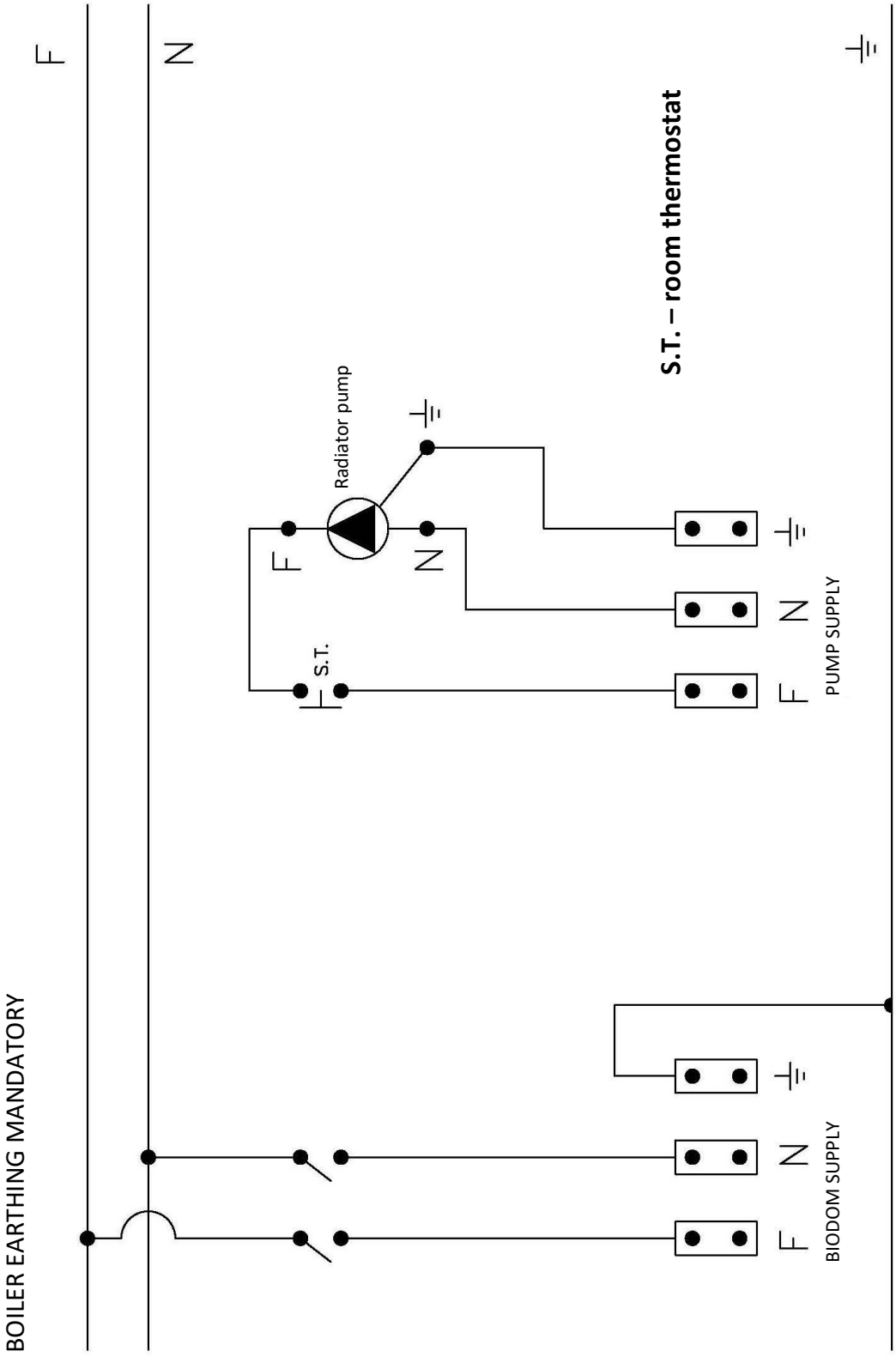

Electrical scheme 1

18.3. SCHEME NR.2: HEATING HOUSEHOLD HOT WATER

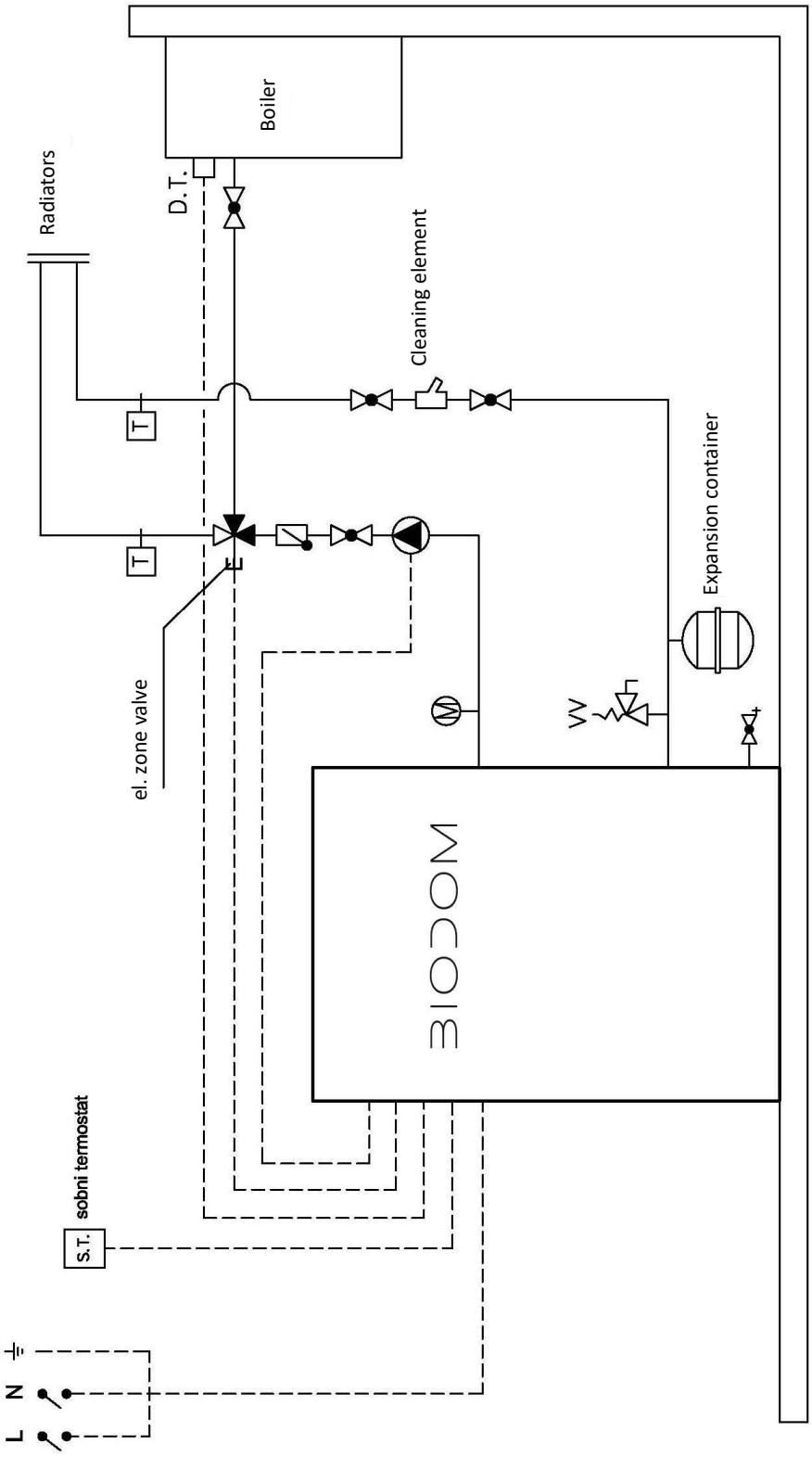

Connection scheme 2

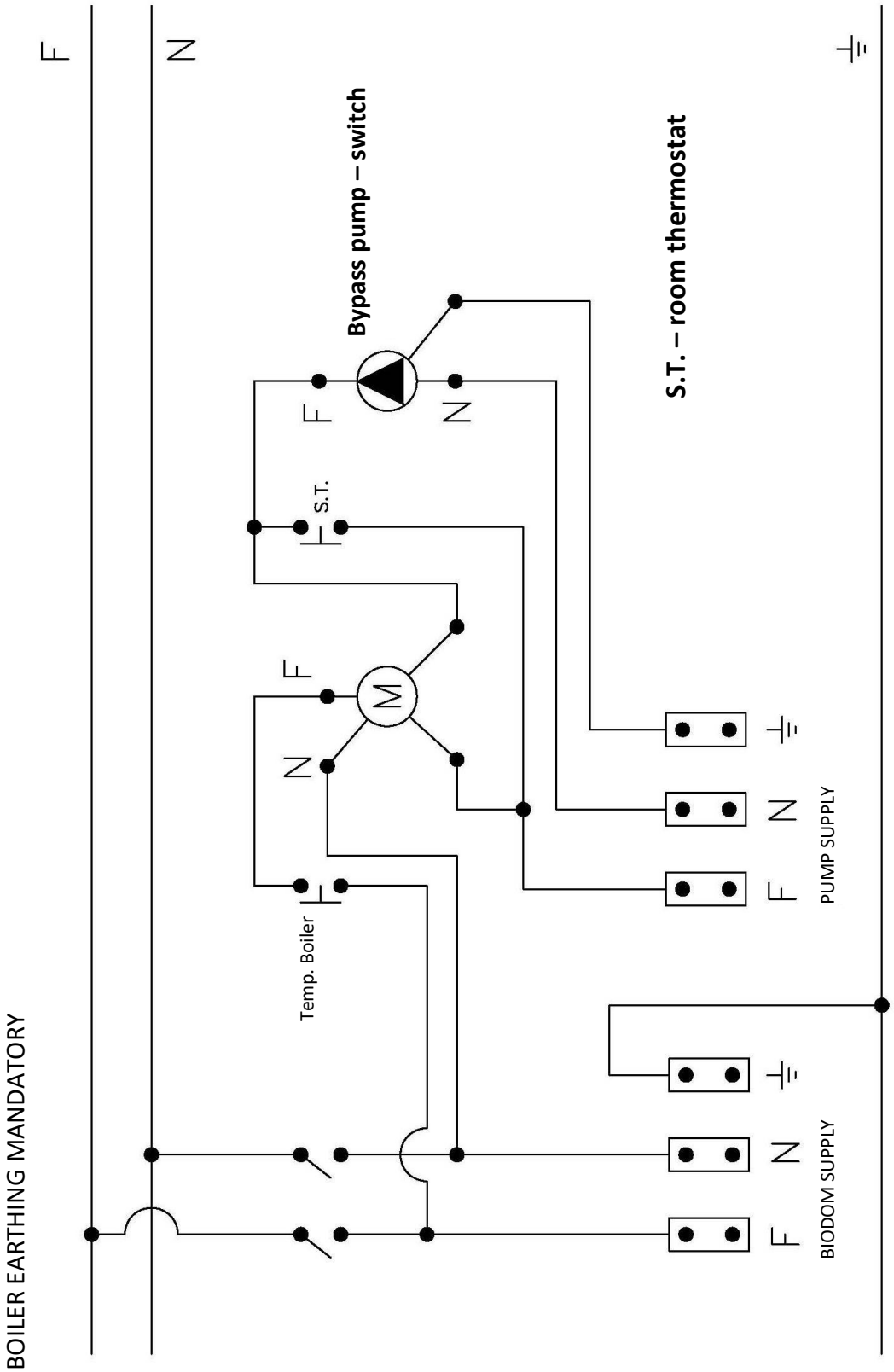

Electrical scheme 2

18.4. SCHEME NR.3: HEATING WITH MULTIPLE SYSTEMS

This type of connection always requires a hydraulic switch.

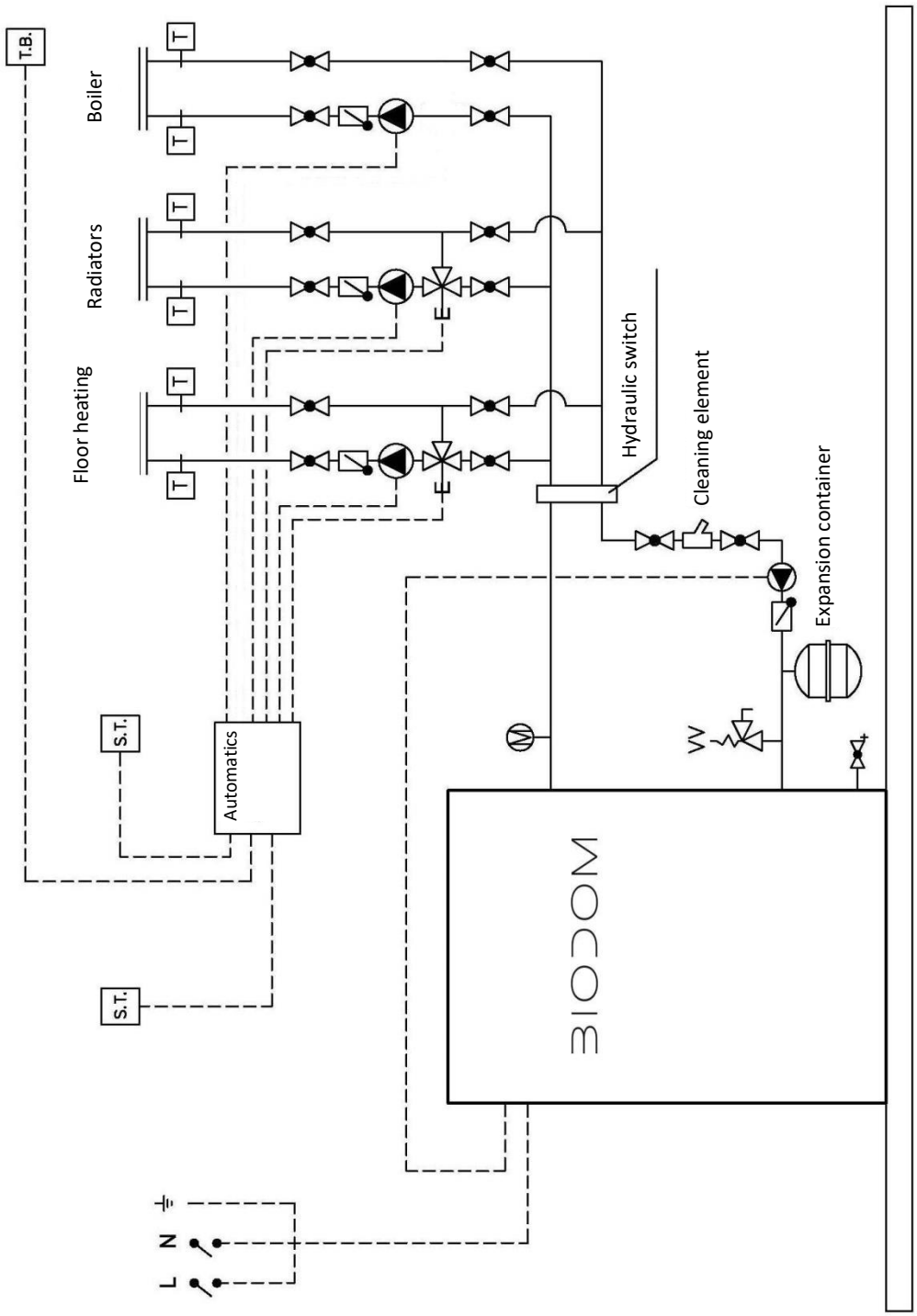

Connection scheme 3

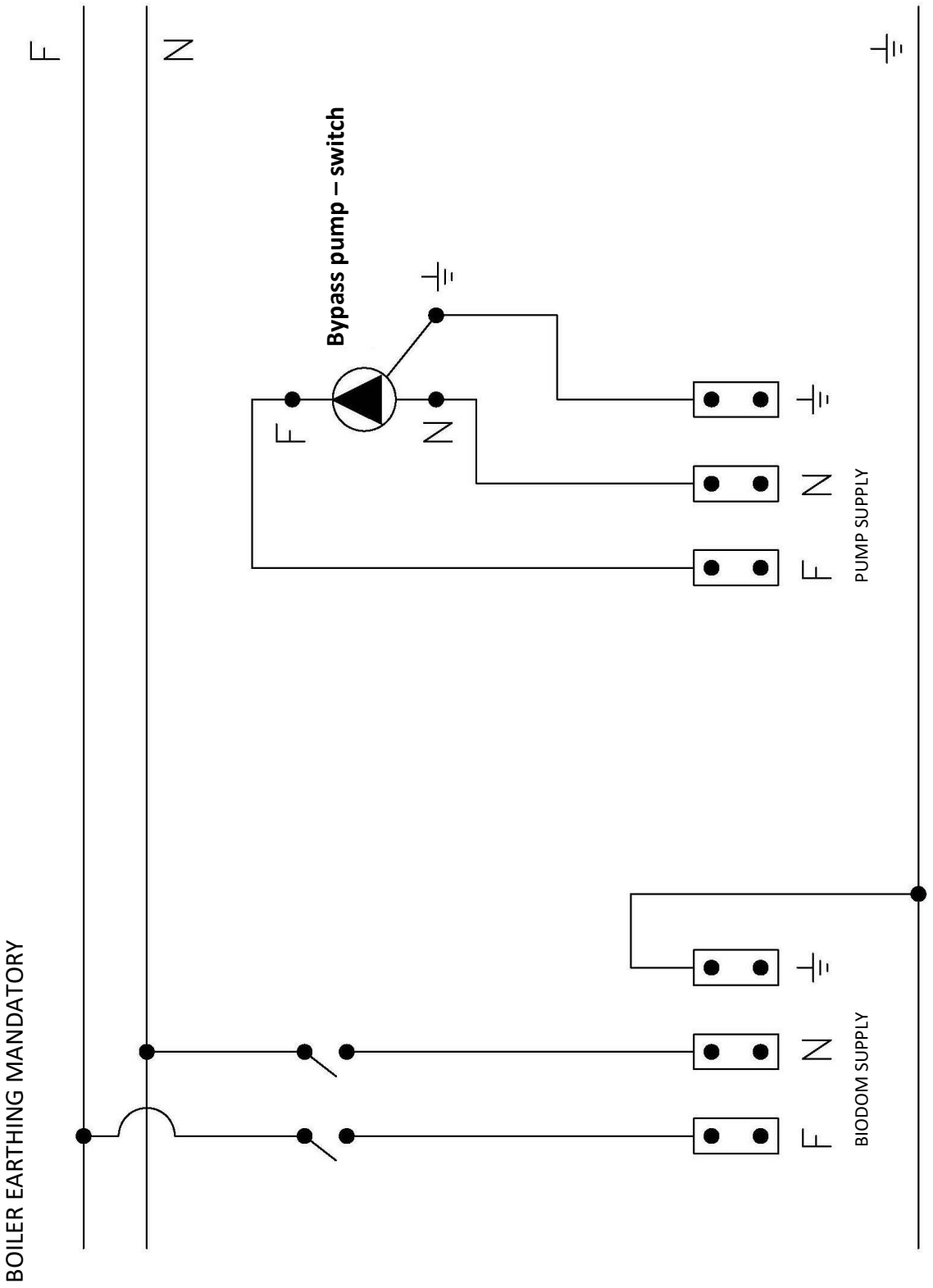

Electrical scheme 3

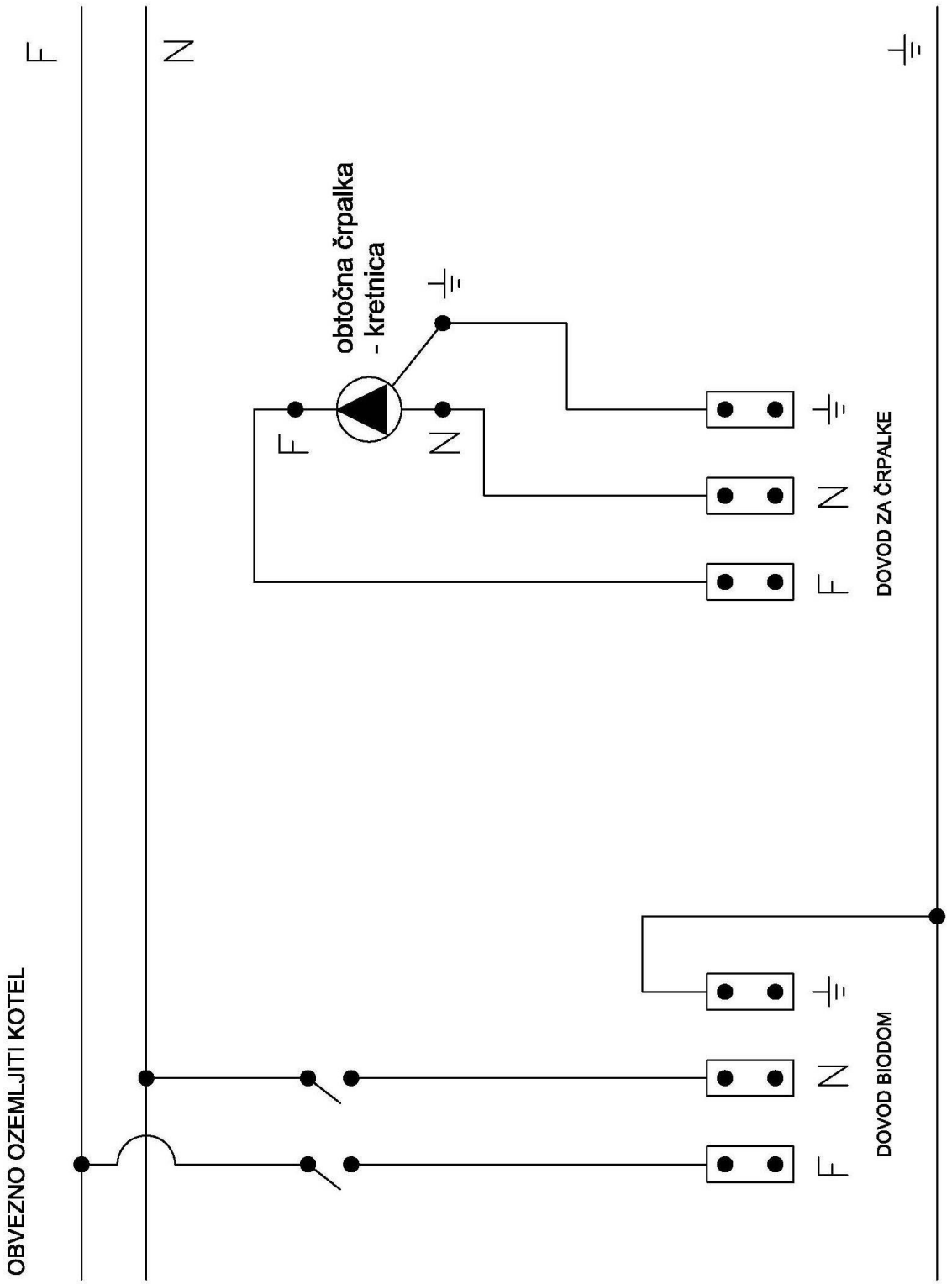
F
N
obtočna črpalka
- kretnica
F
N
F
N
F
DOVOD ZA ČRPALKE
F
N
F
DOVOD BIODOM
OBVEZNO OZEMLJITI KOTEL

19. INSTRUCTIONS FOR FIRST START-UP

Biodom 21 is a combustion device for heating with pellets. Benefits of combustion device Biodom 21 lie in advanced technology that enables automatic identification of oxygen contents in air, automatic identification of flue draught and automatic identification of pellet quality. When one of the former factors is unsuitable, combustion device Biodom 21 indicates an alarm on the display on unsuitability or fault for lacking (example: if the flue is clogged or does not provide extraction of smoke gases, Biodom 21 displays "ALARM PRESS").

Figure 20: Overview of keyboard buttons (plastic keyboard):

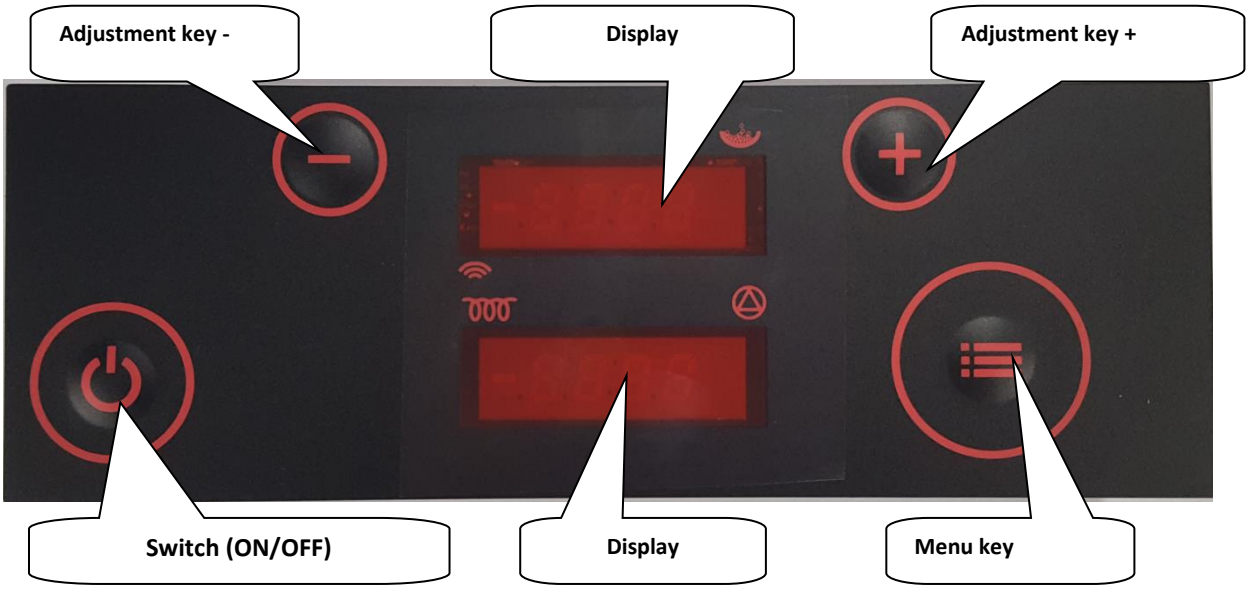

When the installer makes the connection to central heating system, to chimney with flue connection and to electrical network in accordance with instructions for installers, the boiler is ready for start-up. After checking details from instructions for installers, combustion device Biodom 21 can be commissioned with ON/OFF button by the installer, who installed the device.

Upon first start-up, the installer must be careful of correct order of events (displays):

- Press and hold ON/OFF button for 3 seconds. Display indicates ON, and immediately after
- **"Test fire"** – lasts 10 seconds, then goes to:
- **"Heat up"** – quick filling of combustion container with pellets, alternately displaying *P0 d5* (in upper display) and changing temperatures; b – temperature of heating water in the boiler, only number – temperature of smoke gases and r – temperature of return line (in lower display), then goes to:
- **"Fuel igni"** – ignition of combustion device Biodom 21 (upon first ignition, ignition phase can last longer, even up to 10 minutes) lasting approximately 5 minutes, alternately displaying *P0 d5* in upper display and temperature in lower display, then goes to:
- **"Igni test"** – checking ignition, display also changes between *igni test* and *P0 d5*, and temperatures in the lower display. When checking is done, it goes to:
- **"Burn"** – boiler operation, upper display indicates Burn, lower display indicates changing b-temperature of heating water in the boiler, smoke gases and r-temperature of water in the boiler:
- LED in upper display above right signals operation of reducer for dosing pellets (when the LED is turned on, the reducer is dosing pellets into the burner and vice versa: if the light is turned off, the reducer is not operating).

- LED in the lower display below right signals when the boiler is supplying pump with voltage – when the pump is operating (when the light is turned on, the pump is supplied with power, which means that the pump is operating and vice versa: if the LED is turned off, the pump is not operating),
- When the temperature of heating water begins to gets closer to set temperature, combustion device Biodom 21 starts modulation or regulation/reduction of power. In this state, display indicates "**regu H2O**", and upper display alternately shows power (P is the level of boiler operation, d is the level of boiler setting), and lower display shows temperatures.
- **"Cool flui"** – state of shutting down, indicated on the display when combustion device Biodom 21 reaches set temperature of heating water in the boiler with addition for regulation (if the temperature of heating water is set to 70 °C, the boiler enter "cool flui" state at 75 °C). When the boiler finishes "Cool flui" state, it means that the heating water in the boiler cooled down. It goes to:
- **"Test fire"** – and the ignition procedure is repeated.

Control of information on operation of combustion device Biodom 21 requires menu access into programme of information (shown data is only illustrative). Enter the menu with long press on MENU button, when the display shows "tH2O", release the button. Use + and - buttons to select desired information.

Displayed information is:

- **tH2O** temperature of heating water in the boiler
- **rH2O** temperature of heating water on return
- **tFLU** temperature of smoke gases ((H2O)+30-90°C),
- **tChb** temperature of fire in combustion chamber (615°C+-40°C)
- **floU** inlet of air-oxygen into combustion device (480°C +- 40°C)
- **Fan1** voltage on fan 1 (130V +- 15V)
- **Fed1** percentage of pellet dosing into the burner (70% +- 20%)

Once you have completed viewing information, use + and - buttons to find information "tH2O". When finding it, short press ON/OFF button to return to previous state.

If the display indicates "alarm", cause of the alarm must be determined with alarm list (see page 32).

20. WARRANTY CONDITIONS

OVERVIEW:

For the warranty to be completely valid, as set forth in Directive EEC 1999/44/E (42/2002), the user must carefully heed to instructions in this document, namely:

- Use the pellet boiler in its limits, in accordance with the conditions set forth in the instructions for use;
- Maintain the pellet boiler in a diligent and constant manner;
- Regard all safety precautions in accordance with laws in force;
- Avoid any unprofessional tampering with the boiler;
- Use only original spare parts.

WARRANTY TIME CONDITIONS:

Warranty for all Biodom products is valid for 24 months from the date of first start-up, given that a regular maintenance inspection is performed no later than 12 months from the date of start-up.

GENERAL WARRANTY CONDITIONS:

1. We declare:

- that the product will function flawlessly in the warranty period, if used in accordance with the purpose of use, and if enclosed Instructions for use and maintenance will be adhered to;
- that, in the warranty period, company Biodom will, through authorized service companies, resolve all faults/defects, due to which the device is not working in accordance with purpose, no later than 45 days from written report of fault or defect;
- that a product, not repaired in the aforementioned deadline, will be, at the request of warranty holder, replaced with a new one, and the warranty period will extend for the time of the repair;
- that authorized service company guarantees warranty conditions with signature and stamp on published warranty.

2. Calling on the warranty:

Warranty is valid under the condition that:

- The customer possesses a valid document (receipt), issued by salesman.
- The combustion device was installed by a qualified and/or trained person, who determines if the device meets all technical characteristics of the system where the device will be installed to, and must be necessarily in accordance with requirements set forth in the instructions.
- The pellet boiler is used in accordance with the instructions for use.

Warranty is called on at the salesman, where you have purchased the device.
Upon claiming fault, provide an accurate description of fault – defect.

3. Period of guaranteeing service and spare parts:

- warranty period, in which we guarantee service and spare parts for undisturbed use of the product, is 5 years from the day of first start-up;
- in case of replacing production models Biodom, we guarantee spare parts for your product for 3 years;
- after 5 years, spare parts will be available, but they may be available in different colour than your product.

4. Warranty is void or does not cover damages, caused by:

- Weather, chemical or electrochemical influences, lightning strikes, elementary accidents and/or natural disasters, incorrect use of the product, insufficient maintenance, modifications to the product or tampering with the product, unsuitable or inefficient flue and other reasons not connected to the product, such as incorrect or unsuitable installation;

- Burning of materials, which do not correspond with the type of material given in these instructions;
- Any kind of damage caused by/during transport. Therefore, carefully inspect delivered goods upon reception. If it is damaged, immediately inform the salesman, and record the damage on admission document or supply order;
- If the start-up was performed by a company without appropriate authorization for Biodom products;
- If the product has been tampered with or repaired by an unauthorized person;
- If the user does not comply with the instructions for use and maintenance;
- If defects or faults arise on the heating device Biodom due to defects on equipment of other manufacturers.

Liability of company Biodom 27 d.o.o. is limited to unit supply. Unit must be installed properly in accordance with manufacturer instructions, as well as with laws in force. Installation must be performed by qualified personnel, defined by the manufacturer or representative/salesman[1] (and/or under his supervision and liability), who assumes full responsibility for final installation and subsequent correct operation of installed product. In case of non-fulfilment of conditions, company Biodom 27 d.o.o. is not liable in any case.

[1] As representative/salesman is considered any natural person or legal entity authorized for sales of products to end users of this warranty.

NOTE: Biodom 27 d.o.o. shall not be held liable for any damage and consequences, even if these are a consequence of replacement of malfunctioning part of the boiler.
Biodom 27 d.o.o. guarantees that all of its products are made of materials of highest quality and with manufacturing processes, which ensure perfect efficiency. If during normal use, there should be any defective or malfunctioning parts, they must be replaced.

PARTS, SUBJECT TO NORMAL WEAR, NOT COVERED BY WARRANTY:

- Seals and cast iron parts, which do not show any signs of faults, which could be attributed to manufacturing error;
- Changes in colour, cracks and small dimensional modifications are not substantiated and do not present grounds for rejection, as they are a consequence of natural characteristics of materials.

LIABILITY:

Biodom 27 d.o.o. shall not recognize any compensation for direct or indirect damage caused by or related to the product.

SERVICE DURING WARRANTY PERIOD:

Biodom 27 d.o.o. handles problems regarding warranty only through its authorized persons.

COMPETENT COURT:

The Court of Koper shall have jurisdiction for settling disputes.
In the event of replacement of parts, the warranty is not extended.
No reimbursement is acknowledged for the period of time, during which the product could not be used.
Biodom 27 d.o.o. is not liable for any mistakes in the instructions. We reserve the right to changes without any prior notice.

21. SCHEME OF COMPONENTS

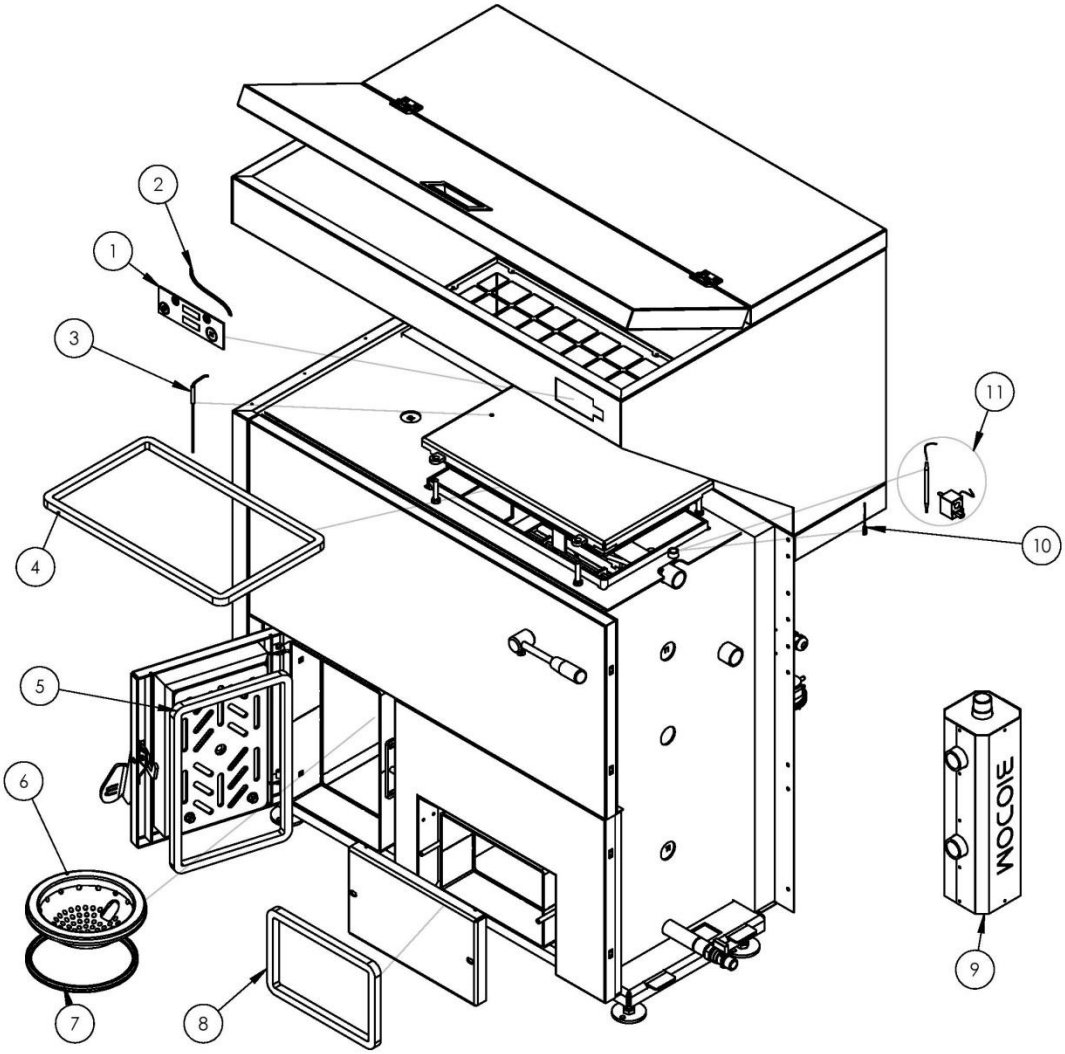

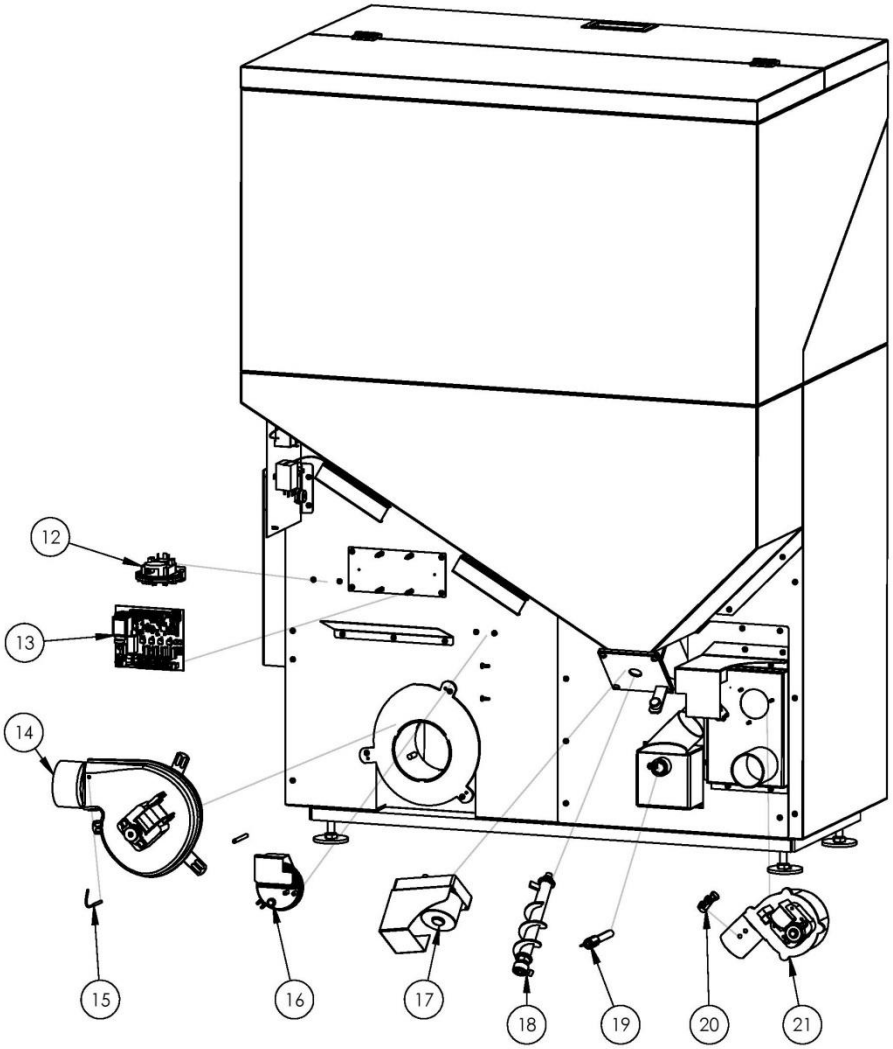
12
13
14
15
16
17
18
19
20
21

SERVICE 1 (SERVICE IN THE WARRANTY PERIOD)

NUMBER OF REPORT ON ANNUAL REVIEW OF BOILER: _____

TYPE OF WORK: ☐ REGULAR MAINTENANCE ☐ REGULAR MAINTENANCE +3 ☐ RECLAMATION

ENERGENT MANUFACTURER: _____

OTHER: _____

CLIENTS SIGNATURE: _____ STAMP AND SIGNATURE OF SERVISER:

DATE: _____ _____

SERVICE 2

NUMBER OF REPORT ON ANNUAL REVIEW OF BOILER: _____

TYPE OF WORK: ☐ REGULAR MAINTENANCE ☐ REGULAR MAINTENANCE +3 ☐ RECLAMATION

ENERGENT MANUFACTURER: _____

OTHER: _____

CLIENTS SIGNATURE: _____ STAMP AND SIGNATURE OF SERVISER:

DATE: _____ _____

SERVICE 3

NUMBER OF REPORT ON ANNUAL REVIEW OF BOILER: _____

TYPE OF WORK: ☐ REGULAR MAINTENANCE ☐ REGULAR MAINTENANCE +3 ☐ RECLAMATION

ENERGENT MANUFACTURER: _____

OTHER: _____

CLIENTS SIGNATURE: _____ STAMP AND SIGNATURE OF SERVISER:

DATE: _____ _____

SERVICE 4

NUMBER OF REPORT ON ANNUAL REVIEW OF BOILER: _____

TYPE OF WORK: ☐ REGULAR MAINTENANCE ☐ REGULAR MAINTENANCE +3 ☐ RECLAMATION

ENERGENT MANUFACTURER: _____

OTHER: _____

CLIENTS SIGNATURE: _____ STAMP AND SIGNATURE OF SERVISER:

DATE: _____ _____

SERVICE 5

NUMBER OF REPORT ON ANNUAL REVIEW OF BOILER: _____

TYPE OF WORK: ☐ REGULAR MAINTENANCE ☐ REGULAR MAINTENANCE +3 ☐ RECLAMATION

ENERGENT MANUFACTURER: _____

OTHER: _____

CLIENTS SIGNATURE: _____ STAMP AND SIGNATURE OF SERVISER:

DATE: _____ _____

SERVICE 6

NUMBER OF REPORT ON ANNUAL REVIEW OF BOILER: _____

TYPE OF WORK: ☐ REGULAR MAINTENANCE ☐ REGULAR MAINTENANCE +3 ☐ RECLAMATION

ENERGENT MANUFACTURER: _____

OTHER: _____

CLIENTS SIGNATURE: _____ STAMP AND SIGNATURE OF SERVISER:

DATE: _____ _____

SERVICE 7

NUMBER OF REPORT ON ANNUAL REVIEW OF BOILER: _____

TYPE OF WORK: ☐ REGULAR MAINTENANCE ☐ REGULAR MAINTENANCE +3 ☐ RECLAMATION

ENERGENT MANUFACTURER: _____

OTHER: _____

CLIENTS SIGNATURE: _____ STAMP AND SIGNATURE OF SERVISER:

DATE: _____ _____

BIODOM EUROPE SRL

www.biodom.eu

info@biodom.eu